Icon Valves & Engineering Pvt. Ltd.

One stop solution for Lined Valves, Pipes, and Fittings

www.ptfelinedproducts.com

ABOUT US

Complete Range Of FEP/PFA/PTFE Lined Valves, Pipes and Fittings:

Welcome and thank you very much for your interest.

From the year 1996, ICON Valves & Engineering Pvt Ltd (Formerly Industrial Valves & Equipments) "IVE" is engaged in manufacturing, supplying and exporting wide range of valves, pipes and fittings.

All Lined products offered by "IVE" are designed, manufactured, and tested to operate as per the process requirements and adheres to all international standards.

With our rich experience supported by manufacturing infrastructure and our willingness to delight customers, we are sure, you will find the best solution for anti corrosive valves, pipes and fittings.

This catalogue will help you to select the most suitable lined valves, pipes and fittings. Please visit www.ptfelinedprodcuts.com for more information, to download the PDF drawing. Also view our other range of valves on www.ivevalves.com and www.flushbottomvalves.net

And if you don't find what you are looking, we will develop it for you.

Our complete range of anti corrosive pipes, fittings and valves are used by the leading companies like Reliance, Cipla, Lupin, Sun Pharma, Piramal and OEM's.

Email me your inquiry on ptfe@ptfelinedproducts.com

Looking forward to serve you.

Sanjay Mehta
Director

TABLE OF CONTENT

SPECIFICATIONS FOR LINED PIPE, FITTINGS AND VALVES 1-2

1. Y Type Flush Bottom Valve
   - a. *Manually Operated Y type Flush Bottom valve* 3-6
   - b. *Actuated Y type Flush Bottom valve- Cylinder Operate* 7-10
   - c. *Actuated Y type Flush Bottom valve- Diaphragm Operated - Top Mount* 11-14
   - d. *Actuated Y type Flush Bottom valve- Diaphragm Operated - Side Mount* 15-18

2. Flush Bottom Ball Valve
   - a. *Manual Flush Bottom Ball valve* 19
   - b. *Actuated Flush Bottom Ball valve* 20

3. Ball Valve
   - a. *Manual Ball Valve* 21
   - b. *Actuated Ball Valves* 22

4. Check Valve
   - a. *Waffer Check Valve* 23
   - b. *Ball Check Valve* 24

5. Flow Indicator
   - a. *Sight Tube Glass* 25
   - b. *Double Window Sight Flow Indicator* 26

6. Plug Valve 27

7. Diaphragm Valve 28

8. Y Strainers 29

9. Butterfly Valve 30

PIPES & FITTINGS

10. PTFE Lined Pipes 31
11. PTFE Lined Elbow 90° 32
12. PTFE Lined Elbow 45° 33
13. PTFE Lined Eq. Tee 34
14. PTFE Lined Un-Eq. Tee ½" to 2" 35
15. PTFE Lined Un-Eq. Tee 2½" to 4" 36
16. PTFE Lined Un-Eq. Tee 5" to 12" 37
17. PTFE Lined Concentric. Reducers 38
18. PTFE Lined Eccentric. Reducers 39
19. PTFE Lined Cross 40
20. PTFE Lined Reducing Flange ½" - 4" 41
21. PTFE Lined Reducing Flange 6" - 8" 42
22. PTFE Lined Reducing Flange 10" - 12" 43
23. PTFE Lined Instrument Tee. 44
24. PTFE Lined Sparger 45
25. PTFE Lined Dip Pipe 46
26. PTFE Lined Angular Dip Pipe 47

SPECIFICATIONS FOR CS PTFE LINED PIPE, FITTINGS AND VALVES

This specification covers factory made PTFE lined metal pipe, fittings & valves primarily intended for conveying corrosive fluids. All the technical specifications of our PTFE / PFA / FEP lined piping systems generally exceeds the relevant ASTM F 1545-95 Standard specifications. This specification covers ANSI 150# PTFE lined pipe & fittings in nominal diameter from 25NB to 400NB.

Material of Construction : CS PTFE / PFA / FEP lined
Pipe & Fittings material : ASTM A106 Gr.B, in compliance with ANSI B 36.10.According to schedule 40 from 25NB to 150NB,schedule 30 from 200NB to 250NB & schedule 20 for 300NB.

Flange Material : IS 2062 plate flanges ANSI B16.5, ASA 150# for drilled holes, ASTM A 105 COLLAR TYPE 150#

Valve Body Material : WCB casting as per ASTM A 216 WCB SS304 casting as per ASTM A 351 Grade Cf8 SS316 casting as per ASTM A 351 Grade CF8M

PTFE liner for pipes : Isostatically Moulded / Paste Extruded or Ram Extruded liner with even pressure throughout the length, molded from standard resin as per ASTM D1457, White color

Lined Fittings : Fittings are lined with RAM extruded Pipes made from from standard resin as per ASTM D1457.

Lined Valves : Valves are lined with PTFE / PFA / FEP.

Lining Material - Resin Type	Standard Resin Specification	Standard Liner Color
PTFE Polytetrafluoroethylene	ASTM D 1457	White
PFA Perfluoro [Alkoxyalkane] copolymer	ASTM D 3307	Natural
FEP Perfluoro [Ethylene-Propylene]copolymer	ASTM D 2116	Natural

Lining Thickness : 3 to 8 mm from 25NB upto 400NB depends on size & location
Standard for Pipe : Collared ends with backing flange as per ANSI B16.5 ASA150#, one end loose flange and other end fixed flange.
Standard for fittings : All fittings are with fixed welded flanges, loose flanges can be offered on extra cost.
Vents holes : Each pipe having two vent holes that will release any pressure between the liner and the housing.
Tolerance for pipe length : ± 3.2mm.
Tolerance for flange bolt hole : ± 1.6mm
Inspection and testing : Pipes and fittings are tested with a non-destructive high voltage tester at an output voltage of 10KV and hydrostatic pressure test at 10 Kg/cm2, ball valves are tested at air pressure of 2Kg/cm2.

Pressure Rating : Vacuume to 06 kg/cm2
Temperature. Rating : - 29˚C to 260˚C

External Finish : Pipes and fittings are paint externally by red oxide primer and valves are paint externally with two coats of paint

Bore size (ID), flare diameter and flange thickness :

SIZE	Lined Pipe ID	Flare Diameter	Flare Thickness
NB	mm	As per ASTM F1545-95	without RF mm
25	18	47.6	14.5
40	32	68.3	14.5
50	42	87.3	16.5
80	67	117.5	18.5
100	88	150.8	18.5
150	138	203.2	23
200	186	255.6	23
250	234	311.2	25
300	282	365.1	33.6

Packing : Both ends of pipe are packed with good quality ply tightened with set of nut and bolts, fittings are packed with corrugated paper packing.

PROPERTIES OF FLUORO POLYMERS.

Fluoropolymer	Trade Names	Monomers	Melting Point (°C)
PVF (polyvinylfluoride)	Tedlar[7]	VF 1	200[8]
PVDF (polyvinylidene fluoride)	Kynar[9] Solef[10] Hylar[11]	VF 2	175
PTFE (polytetrafluoroethylene)	Sold by AGC under the tradename Fluon PTFE; Sold by DuPont under the tradename Teflon; sold by Solvay Solexis under the tradenames Algoflon Hyflon and Polymist, Neoflon (Daikin)	TFE	327
PCTFE (polychlorotrifluoroethylene)	Kel-F (3M), Neoflon (Daikin)	CTFE	220[8]
PFA, MFA [12] (perfluoroalkoxy polymer)	Sold by AGC under the tradename Fluon PFA. Sold by DuPont under the tradename Teflon. Sold by Solvay Solexis under the tradename Hyflon[13] Neoflon (Daikin)	PPVE + TFE	305
FEP (fluorinated ethylene-propylene)	Sold by DuPont under the tradename Teflon FEP. Also known as Neoflon (Daikin) and Hyflon	HFP + TFE	260
ETFE (polyethylenetetrafluoroethylene)	Sold by AGC under the trade name of FluonETFE[14] Tefzel,[15]	TFE + E	265
ECTFE (polyethylenechlorotrifluoroethylene)	Halar[16]	CTFE + E	
FFPM/FFKM (Perfluorinated Elastomer [Perfluoroelastomer])	Kalrez.[17] Tecnoflon PFR[18]		
FPM/FKM (Fluorocarbon [Chlorotrifluoroethylenevinylidene fluoride])	Viton,[19] Tecnoflon FKM		
FEPM (Fluoroelastomer [Tetrafluoroethylene-Propylene])	Sold by AGC under the trade name of AFLAS,[20]	TFE + P	
PFPE (Perfluoropolyether)	Sold by DuPont under the tradename Krytox.[21] Sold by Solvay Solexis S.p.A. as Fomblin and Galden		
PFSA (Perfluorosulfonic acid)	Nafion		
Perfluoropolyoxetane			

Property	Method No.	Units	PTFE	FEP	PFA	ETFE	ECTFE	PCTFE	PVDF
Specific Gravity	D792	-	2.17	2.15	2.15	1.7	1.7	1.7	1.78
Yield Strength	D638	MPa	10	12	15.5	24	31	40	46
Yield Strength	D638	PSI	1,450	1,740	2,250	3,480	4,500	5,800	6,670
Elongation		%	200 - 500	250 - 350	300	200 - 500	200 - 300	80 - 250	20 - 150
Tensile Modulus	D638	MPa	600	500	700	1500	1655	1500	2400
Tensile Modulus	D638	ksi	87	72.5	101.5	217.5	240	218	348
Hardness	D2240	Shore D	60	57	62	75	75	90	79
HDT, @ 66 PSI	D648	˚F	250	158	164	219	240	248	300
HDT, @ 264 PSI	D648	˚F	122	129	118	160	169	-	239
Limiting Oxygen Index	D2863	%	>95	>95	>95	30-36			
Dielectric Constant	D150	1 MHz	2.1	2.1	2.1	2.6			

FEP / PFA LINED FLUSH TANK BOTTOM VALVE OPEN UP 150# LONG HUB

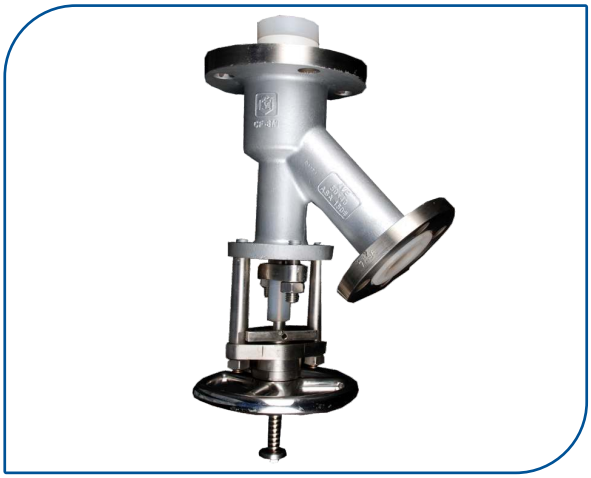

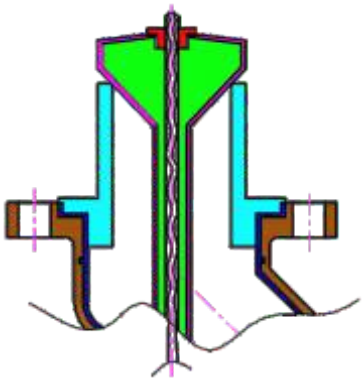

PROVISION RTD SENSOR

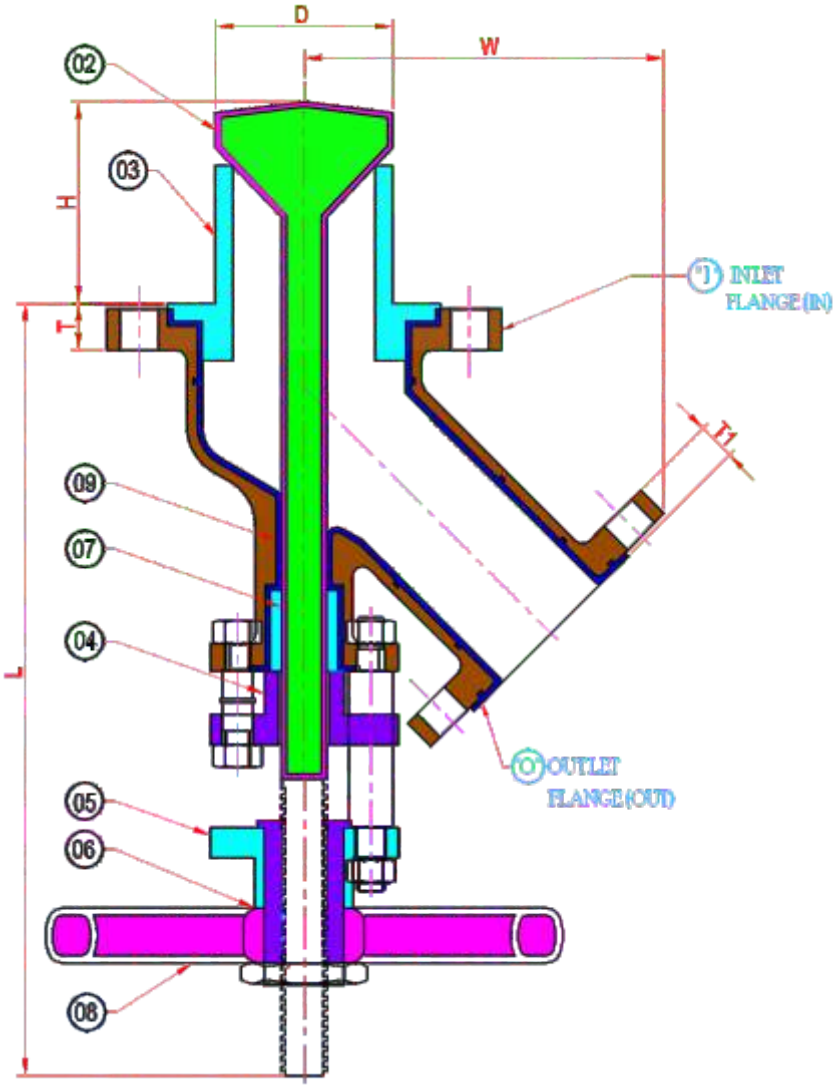

SR. NO.	DESCRIPTION	MATERIAL	QTY.
01	BODY	ASTM A216 WCB, ASTM A351 / CF8 / CF8M x FEP / PFA LINED	1
02	DISC & STEM (1 PIECE)	AISI SS 304 x FEP / PFA LINED	1
03	SEAT	PTFE / GLASS FILED PTFE	1
04	GLAND	CS / CF 8	1
05	YOKE BUSH HOUSING	CS/ CF 8	1
06	YOKE BUSH	GUNMETAL	1
07	GLAND PACKING	PTFE/GF/CF PTFE WITH PTFE ROPE	1
08	HAND WHEEL	CI / SS 304	1
09	LINING	3 TO 5MM-FEP OR PFA LINING	1

TECHNICAL DATA	
DESIGN & MANUFACTURING STD.	MANUFACTURER'S STD.
TESTING & INSPECTION STD.	API 598
END CONNECTIONS :	FLANGED AS PER ANSI B 16.5
STANDARD RESIN SPECIFICATION:	PFA : ASTM D 3418 / FEP : ASTM D 2116

PRIMARY SERVICE RATING & TEST PRESSURE				
CLASS	WORKING PRESS.	HYD. TEST PRESSURE		
		BODY	SEAT	TEMP.
150	100 PSIG	225 PSIG	150 PSIG	150/200˚C
AIR TEST-SEAT		80 PSIG ±10 PSIG; SPARK TEST : 10 KVA		

FLUSH TANK BOTTOM VALVE FLANGE END DISC OPENING INTO THE TANK 150# LONG HUB										
SIZE (mm)		Approx	H	D	Approx	(FLANGE DIMENSIONS)		(FLANGE DIMENSIONS)		WT./KG.
IN	OUT	L			W	I	T	O	T1	
1.1/2”	1”	350	TO BE SPECIFIED BY CLIENT	TO BE SPECIFIED BY CLIENT	140	AS PER 1.1/2” NB ASA 150#	14	AS PER 1” NB ASA 150#	11	10
2”	1.1/2”	375			165	AS PER 2” NB ASA 150#	16	AS PER 1.1/2” NB ASA 150#	14	13
3”	2”	440			176	AS PER 3” NB ASA 150#	19	AS PER 2” NB ASA 150#	16	16
4”	3”	470			210	AS PER 4” NB ASA 150#	24	AS PER 3” NB ASA 150#	19	32
4”	2”	470			235	AS PER 4” NB ASA 150#	24	AS PER 2” NB ASA 150#	16	20
6”	4”	560			260	AS PER 6” NB ASA 150#	25	AS PER 4” NB ASA 150#	24	38

FEP / PFA LINED FLUSH TANK BOTTOM VALVE OPEN UP 150# SHORT HUB

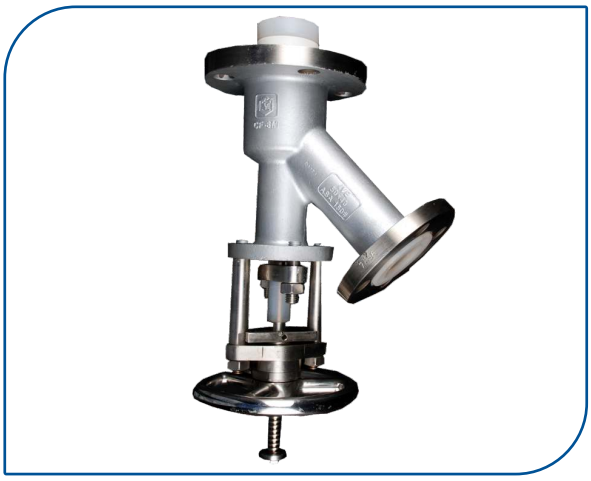

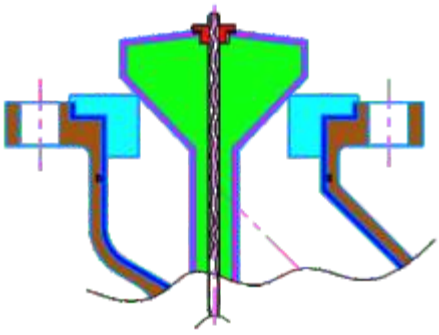

PROVISION RTD SENSOR

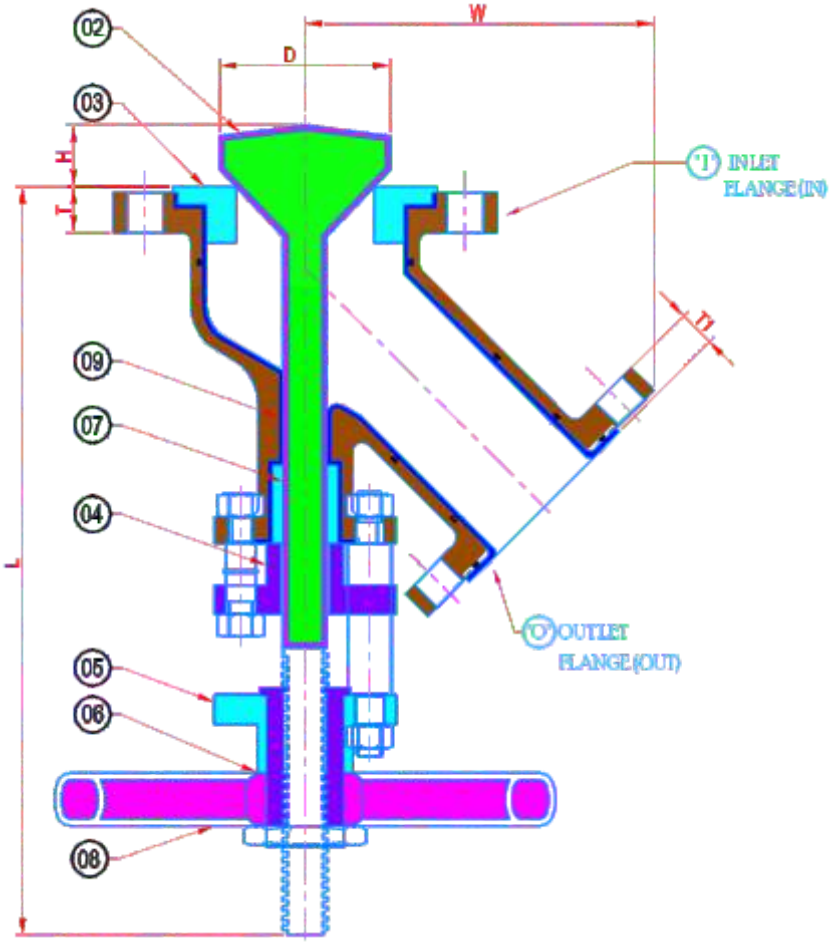

SR. NO.	DESCRIPTION	MATERIAL	QTY.
01	BODY	ASTM A216 WCB, ASTM A351 / CF8 / CF8M x FEP / PFA LINED	1
02	DISC & STEM (1 PIECE)	AISI SS 304 x FEP / PFA LINED	1
03	SEAT	PTFE / GLASS FILED PTFE	1
04	GLAND	CS / CF 8	1
05	YOKE BUSH HOUSING	CS/ CF 8	1
06	YOKE BUSH	GUNMETAL	1
07	GLAND PACKING	PTFE/GF/CF PTFE WITH PTFE ROPE	1
08	HAND WHEEL	CI / SS 304	1
09	LINING	3 TO 5MM-FEP OR PFA LINING	1

TECHNICAL DATA	
DESIGN & MANUFACTURING STD.	MANUFACTURER'S STD.
TESTING & INSPECTION STD.	API 598
END CONNECTIONS :	FLANGED AS PER ANSI B 16.5
STANDARD RESIN SPECIFICATION:	PFA : ASTM D 3418 / FEP : ASTM D 2116

PRIMARY SERVICE RATING & TEST PRESSURE				
CLASS	WORKING PRESS.	HYD. TEST PRESSURE		
		BODY	SEAT	TEMP.
150	100 PSIG	225 PSIG	150 PSIG	150/200˚C
AIR TEST-SEAT		80 PSIG ±10 PSIG; SPARK TEST : 10 KVA		

FLUSH TANK BOTTOM VALVE FLANGE END DISC OPENING INTO THE TANK 150# SHORT HUB										
SIZE (mm)		Approx	H	D	Approx	(FLANGE DIMENSIONS)		(FLANGE DIMENSIONS)		WT./KG.
IN	OUT	L			W	I	T	O	T1	
1.1/2"	1"	350	TO BE SPECIFIED BY CLIENT	TO BE SPECIFIED BY CLIENT	140	AS PER 1.1/2" NB ASA 150#	14	AS PER 1" NB ASA 150#	11	10
2"	1.1/2"	375			165	AS PER 2" NB ASA 150#	16	AS PER 1.1/2" NB ASA 150#	14	13
3"	2"	440			176	AS PER 3" NB ASA 150#	19	AS PER 2" NB ASA 150#	16	16
4"	3"	470			210	AS PER 4" NB ASA 150#	24	AS PER 3" NB ASA 150#	19	32
4"	2"	470			235	AS PER 4" NB ASA 150#	24	AS PER 2" NB ASA 150#	16	20
6"	4"	560			260	AS PER 6" NB ASA 150#	25	AS PER 4" NB ASA 150#	24	38

FEP-PFA LINED FLUSH TANK BOTTOM VALVE
'Y' TYPE OPEN DOWN 150# LONG HUB

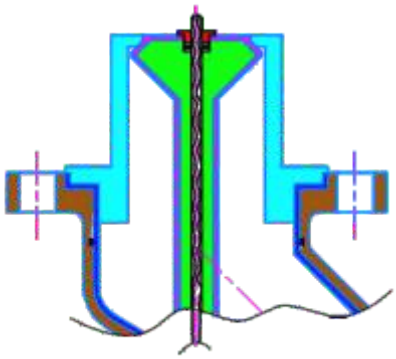

PROVISION RTD SENSOR

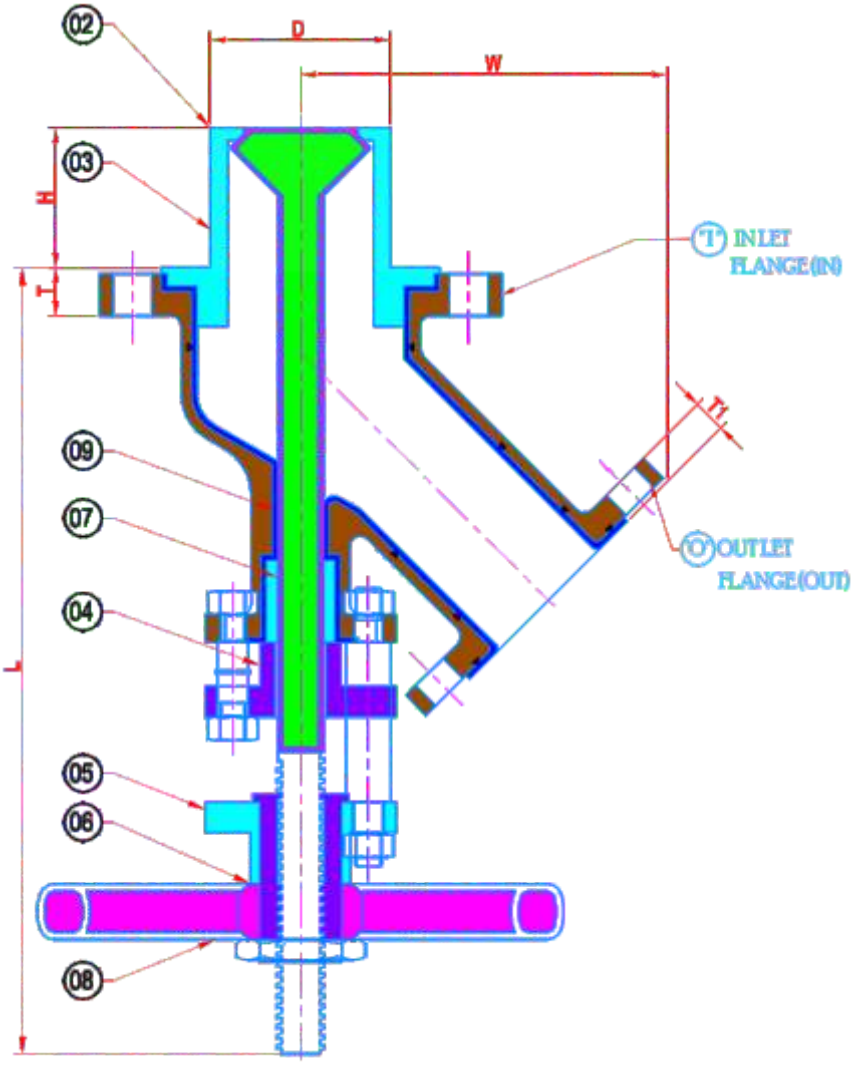

SR. NO.	DESCRIPTION	MATERIAL	QTY.
01	BODY	ASTM A216 WCB, ASTM A351 / CF8 / CF8M x FEP / PFA LINED	1
02	DISC & STEM (ONE PIECE)	AISI SS 304 x FEP / PFA LINED	1
03	SEAT	PTFE / GLASS FILED PTFE	1
04	GLAND	CS / CF 8	1
05	YOKE BUSH HOUSING	CS / CF 8	1
06	YOKE BUSH	GUNMETAL	1
07	GLAND PACKING	PTFE/GF/CF PTFE WITH PTFE ROPE	1
08	HAND WHEEL	CI / SS 304	1
09	LINING	3 TO 5MM-FEP OR PFA LINING	1

TECHNICAL DATA	
DESIGN & MANUFACTURING STD.	MANUFACTURER'S STD.
TESTING & INSPECTION STD.	API 598
END CONNECTIONS :	FLANGED AS PER ANSI B-16.5
STANDARD RESIN SPECIFICATION:	PFA : ASTM D 3418 / FEP : ASTM D 2116

PRIMARY SERVICE RATING & TEST PRESSURE				
CLASS	WORKING PRESS.	HYD. TEST PRESSURE		
		BODY	SEAT	TEMP.
150	100 PSIG	225 PSIG	150 PSIG	150/200˚C
AIR TEST-SEAT		80 PSIG ±10 PSIG; SPARK TEST : 10 KVA		

FLUSH TANK BOTTOM VALVE FLANGE END DISC OPENING INTO THE VALVE										
SIZE (mm)		Approx	H	D	Approx	(FLANGE DIMENSIONS)		(FLANGE DIMENSIONS)		WT./KG.
IN	OUT	L			W	I	T	O	T1	
1.1/2"	1"	375 + H	TO BE SPECIFIED BY CLIENT	TO BE SPECIFIED BY CLIENT	140	AS PER 1.1/2" NB ASA 150#	14	AS PER 1" NB ASA 150#	11	10
2"	1.1/2"	405 + H			165	AS PER 2" NB ASA 150#	16	AS PER 1.1/2" NB ASA 150#	14	13
3"	2"	485 + H			176	AS PER 3" NB ASA 150#	19	AS PER 2" NB ASA 150#	16	16
4"	3"	520 + H			210	AS PER 4" NB ASA 150#	24	AS PER 3" NB ASA 150#	19	22
4"	2"	520 + H			235	AS PER 4" NB ASA 150#	24	AS PER 2" NB ASA 150#	16	20
6"	4"	610 + H			260	AS PER 6" NB ASA 150#	25	AS PER 4" NB ASA 150#	24	38

FEP-PFA LINED FLUSH TANK BOTTOM VALVE 'Y' TYPE OPEN DOWN 150# SHORT HUB

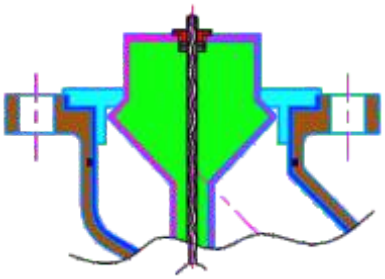

PROVISION RTD SENSOR

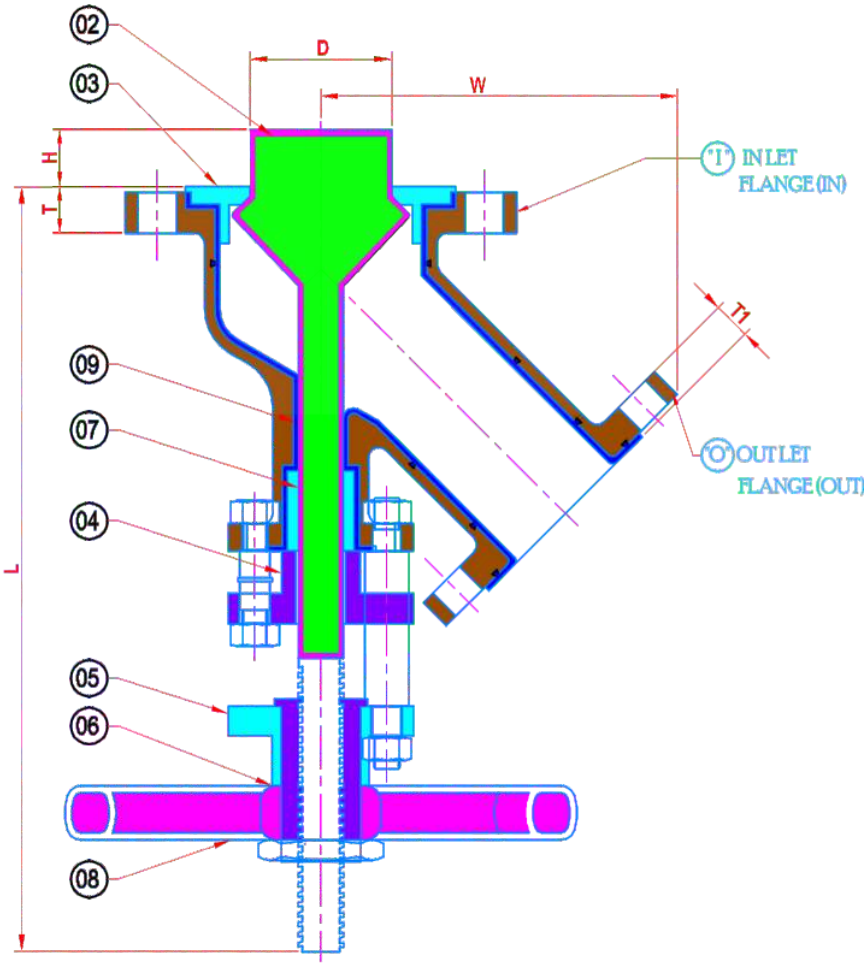

SR. NO.	DESCRIPTION	MATERIAL	QTY.
01	BODY	ASTM A216 WCB, ASTM A351 / CF8 / CF8M x FEP / PFA LINED	1
02	DISC & STEM (ONE PIECE)	AISI SS 304 x FEP / PFA LINED	1
03	SEAT	PTFE / GLASS FILED PTFE	1
04	GLAND	CS / CF 8	1
05	YOKE BUSH HOUSING	CS / CF 8	1
06	YOKE BUSH	GUNMETAL	1
07	GLAND PACKING	PTFE/GF/CF PTFE WITH PTFE ROPE	1
08	HAND WHEEL	CI / SS 304	1
09	LINING	3 TO 5MM-FEP OR PFA LINING	1

TECHNICAL DATA	
DESIGN & MANUFACTURING STD.	MANUFACTURER'S STD.
TESTING & INSPECTION STD.	API 598
END CONNECTIONS :	FLANGED AS PER ANSI B-16.5
STANDARD RESIN SPECIFICATION:	PFA : ASTM D 3418 / FEP : ASTM D 2116

PRIMARY SERVICE RATING & TEST PRESSURE				
CLASS	WORKING PRESS.	HYD. TEST PRESSURE		
		BODY	SEAT	TEMP.
150	100 PSIG	225 PSIG	150 PSIG	150/200˚C
AIR TEST-SEAT		80 PSIG ±10 PSIG; SPARK TEST : 10 KVA		

FLUSH TANK BOTTOM VALVE FLANGE END DISC OPENING INTO THE TANK SHORT HUB										
SIZE (mm)		Approx	H	D	Approx	(FLANGE DIMENSIONS)		(FLANGE DIMENSIONS)		WT./KG.
IN	OUT	L			W	I	T	O	T1	
1.1/2"	1"	375 + H	TO BE SPECIFIED BY CLIENT	TO BE SPECIFIED BY CLIENT	140	AS PER 1.1/2" NB ASA 150#	14	AS PER 1" NB ASA 150#	11	10
2"	1.1/2"	405 + H			165	AS PER 2" NB ASA 150#	16	AS PER 1.1/2" NB ASA 150#	14	13
3"	2"	485 + H			176	AS PER 3" NB ASA 150#	19	AS PER 2" NB ASA 150#	16	16
4"	3"	520 + H			210	AS PER 4" NB ASA 150#	24	AS PER 3" NB ASA 150#	19	22
4"	2"	520 + H			235	AS PER 4" NB ASA 150#	24	AS PER 2" NB ASA 150#	16	20
6"	4"	610 + H			260	AS PER 6" NB ASA 150#	25	AS PER 4" NB ASA 150#	24	38

FEP / PFA LINED FLUSH TANK BOTTOM VALVE OPEN UP 150# CYLINDER OPT LONG HUB

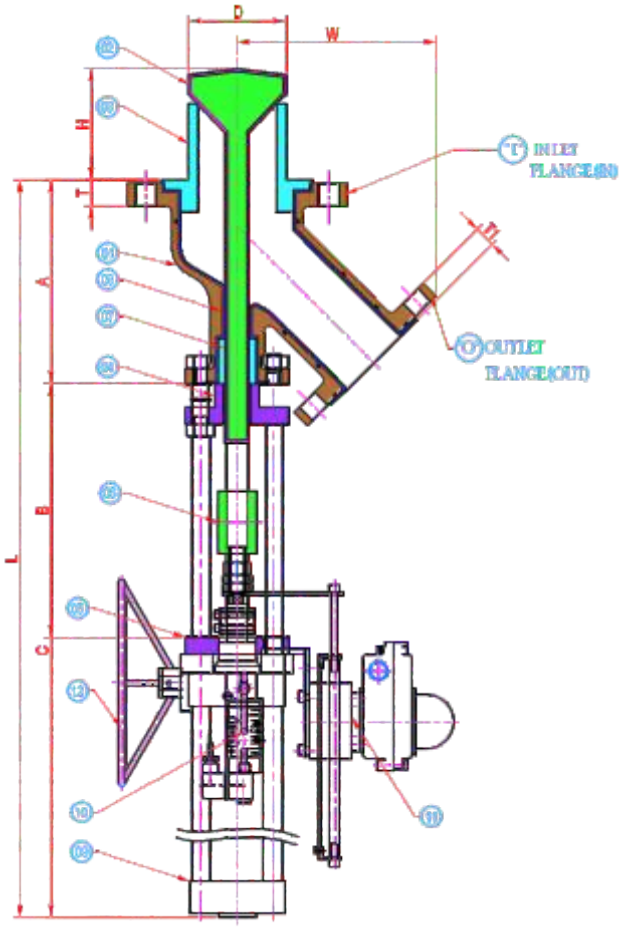

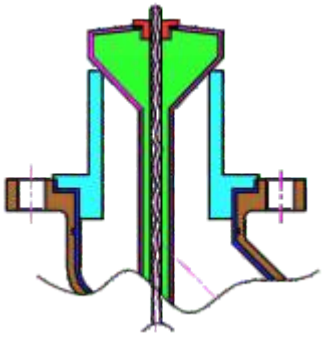

PROVISION RTD SENSOR

SR. NO.	DESCRIPTION	MATERIAL	QTY.
01	BODY	ASTM A216 WCB, ASTM A351 / CF8 / CF8M x FEP / PFA LINED	1
02	DISC & STEM	AISI SS 304 x FEP / PFA LINED	1
03	SEAT	PTFE / GLASS FILED PTFE	1
04	GLAND	CS / CF 8	1
05	MOUNTING PLATE	CS/ CF 8	1
06	COUPLER	MS / SS	1
07	GLAND PACKING	PTFE/GF/CF PTFE WITH PTFE ROPE	1
08	LINING	3 TO 5MM-FEP OR PFA LINING	1
09	PNEUMATIC CYLINDER	ALUMINIUM DIE CAST BODY S/A OR D/A	1
10	LIMIT SWITCH	ALUMINIUM DIE CAST BODY WITH DOME INDICATOR	1
11	SOLENOID VALVE	ALUMINIUM DIE CAST BODY 3/2 5/2 WAY	1
12	MANUAL OVER RIDE	CI BODY	1

TECHNICAL DATA	
DESIGN & MANUFACTURING STD.	MANUFACTURER'S STD.
TESTING & INSPECTION STD.	API 598
END CONNECTIONS :	FLANGED AS PER ANSI B-16.5
STANDARD RESIN SPECIFICATION:	PFA : ASTM D 3418 / FEP : ASTM D 2116

PRIMARY SERVICE RATING & TEST PRESSURE				
CLASS	WORKING PRESS.	HYD. TEST PRESSURE		
		BODY	SEAT	TEMP.
150	100 PSIG	225 PSIG	150 PSIG	150/200˚C
AIR TEST-SEAT		80 PSIG ±10 PSIG; SPARK TEST : 10 KVA		

FLUSH TANK BOTTOM VALVE FLANGE END DISC OPENING INTO THE TANK CYLINDER ACTUATED LONG HUB

SIZE (mm)		Approx	H	D	Approx	Approx			(FLANGE DIMENSIONS)		(FLANGE DIMENSIONS)		WT./KG.
IN	OUT	L = A+B+C			W	A	B	C	I	T	O	T1	FOR VALVE ONLY
1.1/2"	1"		TO BE SPECIFIED BY CLIENT	TO BE SPECIFIED BY CLIENT	140	157	150		AS PER 1.1/2" NB ASA 150#	14	AS PER 1" NB ASA 150#	11	10
2"	1.1/2"				165	183	160		AS PER 2" NB ASA 150#	16	AS PER 1.1/2" NB ASA 150#	14	13
3"	2"				176	203	175		AS PER 3" NB ASA 150#	19	AS PER 2" NB ASA 150#	16	16
4"	3"				210	210	200		AS PER 4" NB ASA 150#	24	AS PER 3" NB ASA 150#	19	22
4"	2"				235	203	200		AS PER 4" NB ASA 150#	24	AS PER 2" NB ASA 150#	16	20
6"	4"				260	260	225		AS PER 6" NB ASA 150#	25	AS PER 4" NB ASA 150#	24	38

FEP / PFA LINED FLUSH TANK BOTTOM VALVE OPEN UP 150# CYLINDER OPT SHORT HUB

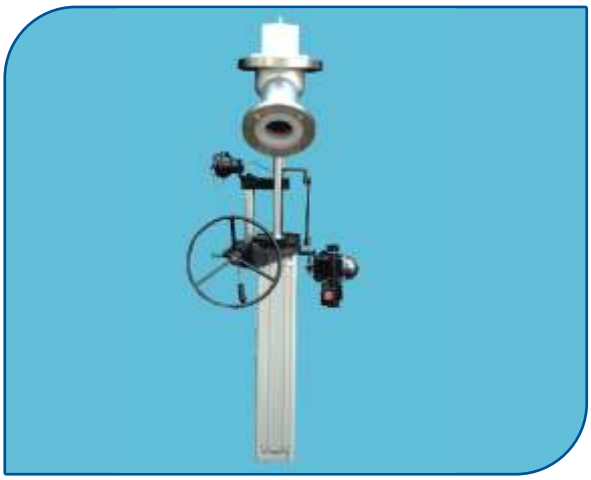

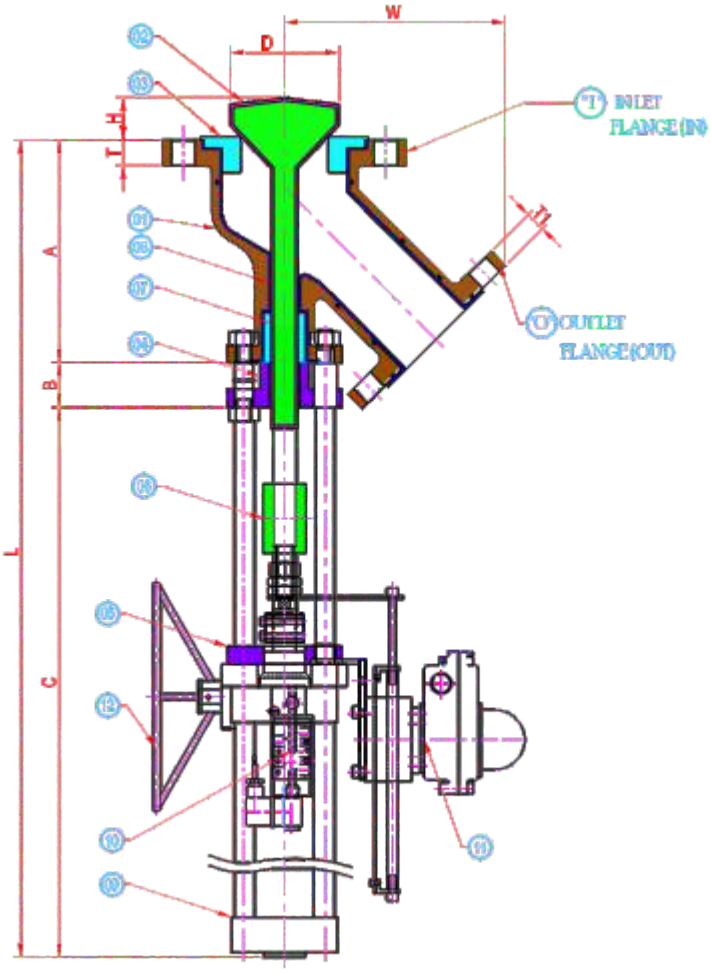

PROVISION RTD SENSOR

SR. NO.	DESCRIPTION	MATERIAL	QTY.
01	BODY	ASTM A216 WCB, ASTM A351 / CF8 / CF8M x FEP / PFA LINED	1
02	DISC & STEM	AISI SS 304 x FEP / PFA LINED	1
03	SEAT	PTFE / GLASS FILED PTFE	1
04	GLAND	CS / CF 8	1
05	MOUNTING PLATE	CS/ CF 8	1
06	COUPLER	MS / SS	1
07	GLAND PACKING	PTFE/GF/CF PTFE WITH PTFE ROPE	1
08	LINING	3 TO 5MM-FEP OR PFA LINING	1
09	PNEUMATIC CYLINDER	ALUMINIUM DIE CAST BODY S/A OR D/A	1
10	LIMIT SWITCH	ALUMINIUM DIE CAST BODY WITH DOME INDICATOR	1
11	SOLENOID VALVE	ALUMINIUM DIE CAST BODY 3/2 5/2 WAY	1
12	MANUAL OVER RIDE	CI BODY	1

TECHNICAL DATA	
DESIGN & MANUFACTURING STD.	MANUFACTURER'S STD.
TESTING & INSPECTION STD.	API 598
END CONNECTIONS :	FLANGED AS PER ANSI B-16.5
STANDARD RESIN SPECIFICATION:	PFA : ASTM D 3418 / FEP : ASTM D 2116

PRIMARY SERVICE RATING & TEST PRESSURE				
CLASS	WORKING PRESS.	HYD. TEST PRESSURE		
		BODY	SEAT	TEMP.
150	100 PSIG	225 PSIG	150 PSIG	150/200˚C
AIR TEST-SEAT		80 PSIG ±10 PSIG; SPARK TEST : 10 KVA		

FLUSH TANK BOTTOM VALVE FLANGE END DISC OPENING INTO THE TANK CYLINDER ACTUATED SHORT HUB

SIZE (mm)		Approx	H	D	Approx	Approx			(FLANGE DIMENSIONS)		(FLANGE DIMENSIONS)		WT./KG.
IN	OUT	L = A+B+C			W	A	B	C	I	T	O	T1	FOR VALVE ONLY
1.1/2"	1"		TO BE SPECIFIED BY CLIENT	TO BE SPECIFIED BY CLIENT	140	157	150		AS PER 1.1/2" NB ASA 150#	14	AS PER 1" NB ASA 150#	11	10
2"	1.1/2"				165	183	160		AS PER 2" NB ASA 150#	16	AS PER 1.1/2" NB ASA 150#	14	13
3"	2"				176	203	175		AS PER 3" NB ASA 150#	19	AS PER 2" NB ASA 150#	16	16
4"	3"				210	210	200		AS PER 4" NB ASA 150#	24	AS PER 3" NB ASA 150#	19	22
4"	2"				235	203	200		AS PER 4" NB ASA 150#	24	AS PER 2" NB ASA 150#	16	20
6"	4"				260	260	225		AS PER 6" NB ASA 150#	25	AS PER 4" NB ASA 150#	24	38

FEP/PFA LINED FLUSH TANK BOTTOM VALVE CYLINDER ACTUATED OPEN DOWN 150# LONG HUB

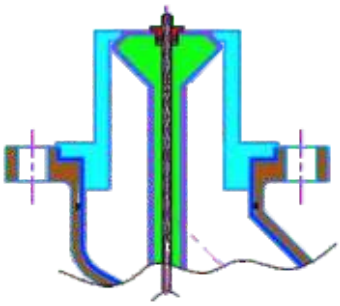

PROVISION RTD SENSOR

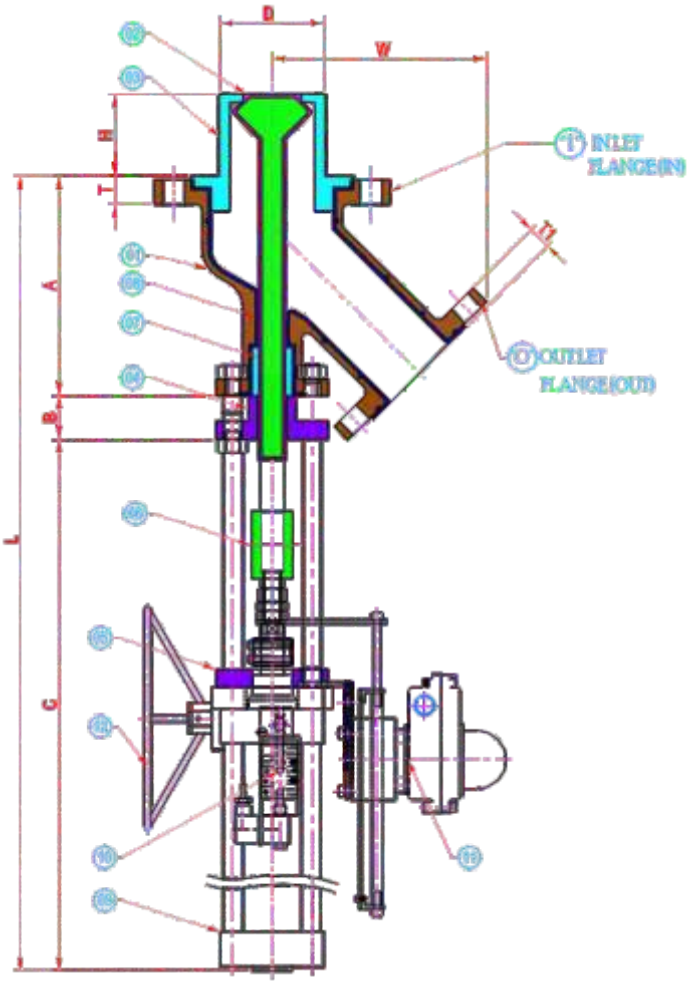

SR. NO.	DESCRIPTION	MATERIAL	QTY.
01	BODY	ASTM A216 WCB, ASTM A351 / CF8 / CF8M x FEP / PFA LINED	1
02	DISC & STEM	AISI SS 304 x FEP / PFA LINED	1
03	SEAT	PTFE / GLASS FILED PTFE	1
04	GLAND	CS / CF 8	1
05	MOUNTING PLATE	CS / CF 8	1
06	COUPLER	MS / SS	1
07	GLAND PACKING	PTFE/GF/CF PTFE WITH PTFE ROPE	1
08	LINING	3 TO 5MM-FEP OR PFA LINING	1
09	PNEUMATIC CYLINDER	ALUMINIUM DIE CAST BODY S/A OR D/A	1
10	LIMIT SWITCH	ALUMINIUM DIE CAST BODY WITH DOME INDICATOR	1
11	SOLENOID VALVE	ALUMINIUM DIE CAST BODY 3/2 5/2 WAY	1
12	MANUAL OVER RIDE	CI BODY	1

TECHNICAL DATA	
DESIGN & MANUFACTURING STD.	MANUFACTURER'S STD.
TESTING & INSPECTION STD.	API 598
END CONNECTIONS :	FLANGED AS PER ANSI B-16.5
STANDARD RESIN SPECIFICATION:	PFA : ASTM D 3418 / FEP : ASTM D 2116

PRIMARY SERVICE RATING & TEST PRESSURE				
CLASS	WORKING PRESS.	HYD. TEST PRESSURE		
		BODY	SEAT	TEMP.
150	100 PSIG	225 PSIG	150 PSIG	150/200°C
AIR TEST-SEAT		80 PSIG ±10 PSIG; SPARK TEST : 10 KVA		

FLUSH TANK BOTTOM VALVE FLANGE END DISC OPENING INTO THE VALVE CYLINDER ACTUATED LONG HUB

SIZE (mm)		Approx	H	D	Approx	Approx			(FLANGE DIMENSIONS)		(FLANGE DIMENSIONS)		WT./KG.
IN	OUT	L = A+B+C			W	A	B	C	I	T	O	T1	FOR VALVE ONLY
1.1/2”	1”		TO BE SPECIFIED BY CLIENT	TO BE SPECIFIED BY CLIENT	140	157			AS PER 1.1/2” NB ASA 150#	14	AS PER 1” NB ASA 150#	11	10
2”	1.1/2”				165	183			AS PER 2” NB ASA 150#	16	AS PER 1.1/2” NB ASA 150#	14	13
3”	2”				176	203			AS PER 3” NB ASA 150#	19	AS PER 2” NB ASA 150#	16	16
4”	3”				210	210			AS PER 4” NB ASA 150#	24	AS PER 3” NB ASA 150#	19	22
4”	2”				235	203			AS PER 4” NB ASA 150#	24	AS PER 2” NB ASA 150#	16	20
6”	4”				260	260			AS PER 6” NB ASA 150#	25	AS PER 4” NB ASA 150#	24	38

FEP/PFA LINED FLUSH BOTTOM VALVE OPEN DOWN CYLINDER OPT 150# SHORT HUB

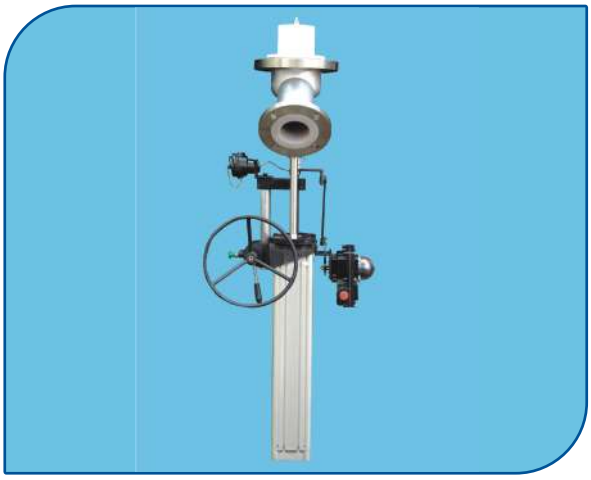

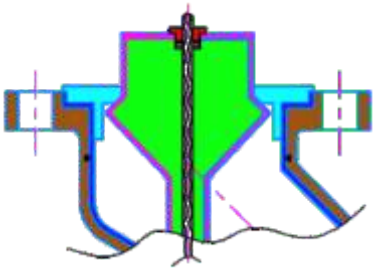

PROVISION RTD SENSOR

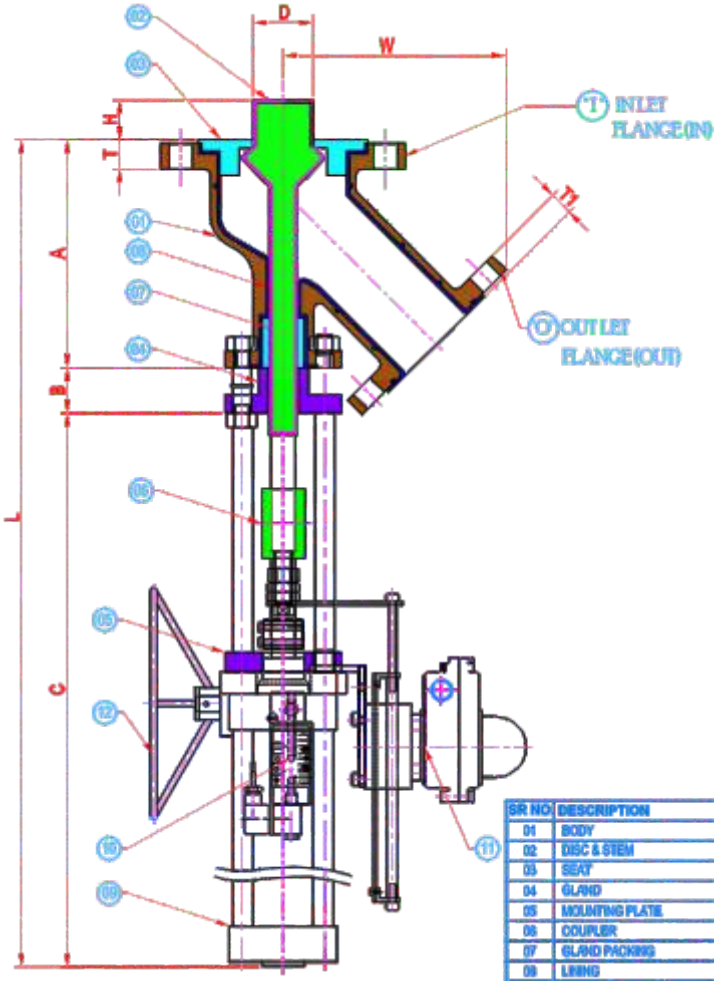

SR. NO.	DESCRIPTION	MATERIAL	QTY.
01	BODY	ASTM A216 WCB, ASTM A351 / CF8 / CF8M x FEP / PFA LINED	1
02	DISC & STEM	AISI SS 304 x FEP / PFA LINED	1
03	SEAT	PTFE / GLASS FILED PTFE	1
04	GLAND	CS / CF 8	1
05	MOUNTING PLATE	CS / CF 8	1
06	COUPLER	MS / SS	1
07	GLAND PACKING	PTFE/GF/CF PTFE WITH PTFE ROPE	1
08	LINING	3 TO 5MM-FEP OR PFA LINING	1
09	PNEUMATIC CYLINDER	ALUMINIUM DIE CAST BODY S/A OR D/A	1
10	LIMIT SWITCH	ALUMINIUM DIE CAST BODY WITH DOME INDICATOR	1
11	SOLENOID VALVE	ALUMINIUM DIE CAST BODY 3/2 5/2 WAY	1
12	MANUAL OVER RIDE	CI BODY	1

TECHNICAL DATA	
DESIGN & MANUFACTURING STD.	MANUFACTURER'S STD.
TESTING & INSPECTION STD.	API 598
END CONNECTIONS :	FLANGED AS PER ANSI B-16.5
STANDARD RESIN SPECIFICATION:	PFA : ASTM D 3418 / FEP : ASTM D 2116

PRIMARY SERVICE RATING & TEST PRESSURE				
CLASS	WORKING PRESS.	HYD. TEST PRESSURE		
		BODY	SEAT	TEMP.
150	100 PSIG	225 PSIG	150 PSIG	150/200˚C
AIR TEST-SEAT		80 PSIG ±10 PSIG; SPARK TEST : 10 KVA		

FLUSH TANK BOTTOM VALVE FLANGE END DISC OPENING INTO THE VALVE CYLINDER ACTUATED SHORT HUB													
SIZE (mm)		Approx	H	D	Approx	Approx			(FLANGE DIMENSIONS)		(FLANGE DIMENSIONS)		WT./KG.
IN	OUT	L = A+B+C			W	A	B	C	I	T	O	T1	FOR VALVE ONLY
1.1/2”	1”		TO BE SPECIFIED BY CLIENT	TO BE SPECIFIED BY CLIENT	140	157			AS PER 1.1/2” NB ASA 150#	14	AS PER 1” NB ASA 150#	11	10
2”	1.1/2”				165	183			AS PER 2” NB ASA 150#	16	AS PER 1.1/2” NB ASA 150#	14	13
3”	2”				176	203			AS PER 3” NB ASA 150#	19	AS PER 2” NB ASA 150#	16	16
4”	3”				210	210			AS PER 4” NB ASA 150#	24	AS PER 3” NB ASA 150#	19	22
4”	2”				235	203			AS PER 4” NB ASA 150#	24	AS PER 2” NB ASA 150#	16	20
6”	4”				260	260			AS PER 6” NB ASA 150#	25	AS PER 4” NB ASA 150#	24	38

FEP / PFA LINED FLUSH TANK BOTTOM VALVE OPEN UP DIAPHRAGM ACTUATED LONG HUB TOP MOUNT

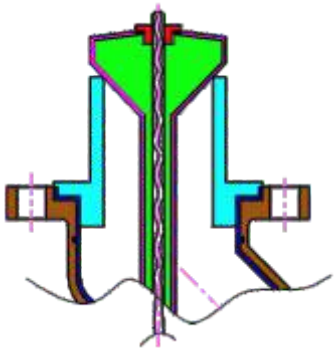

PROVISION RTD SENSOR

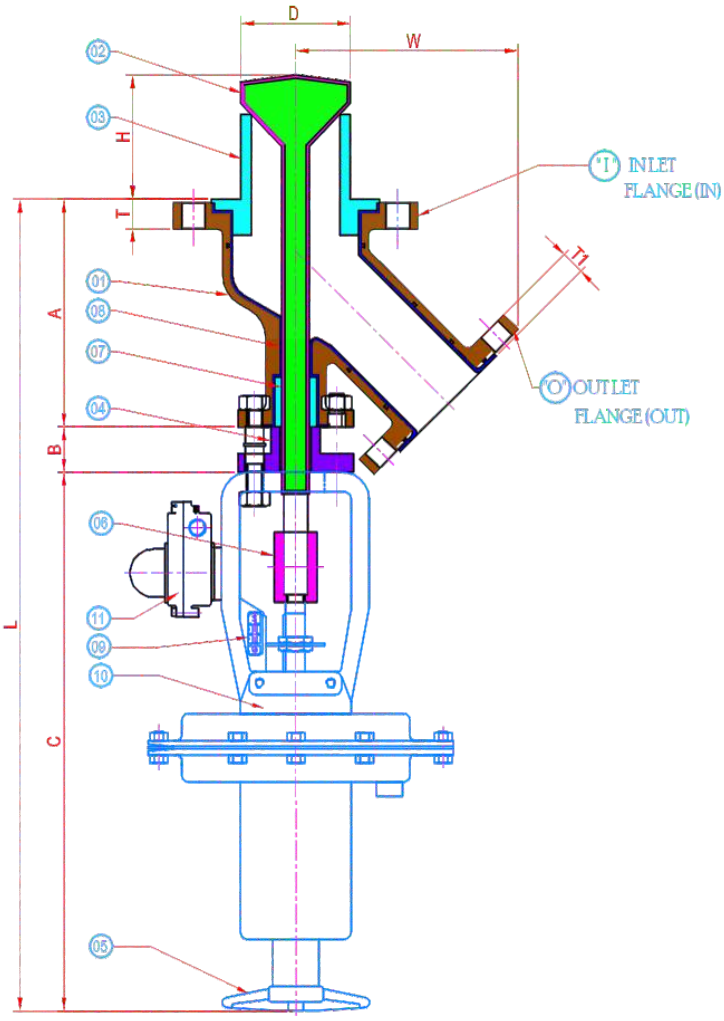

SR. NO.	DESCRIPTION	MATERIAL	QTY.
01	BODY	ASTM A216 WCB, ASTM A351 / CF8 / CF8M x FEP / PFA LINED	1
02	DISC & STEM	AISI SS 304 x FEP / PFA LINED	1
03	SEAT	PTFE / GLASS FILED PTFE	1
04	GLAND	CS / CF 8	1
05	MANUAL OVER RIDE	CS BODY	1
06	COUPLER	MS / SS	1
07	GLAND PACKING	PTFE/GF/CF PTFE WITH PTFE ROPE	1
08	LINING	3 TO 5MM-FEP OR PFA LINING	1
09	SOLENOID VALVE	ALUMINIUM BODY, 3/2 OR 5/2 WAY	1
10	DIAPHGRAM ACTUATOR	CS BODY WITH EPDM DIAPHRAGM DIRECT / REVERSE ACTING	1
11	LIMIT SWITCH	ALUMINIUM BODY, WITH DOME INDICATOR	1

TECHNICAL DATA	
DESIGN & MANUFACTURING STD.	MANUFACTURER'S STD.
TESTING & INSPECTION STD.	API 598
END CONNECTIONS :	FLANGED AS PER ANSI B-16.5
STANDARD RESIN SPECIFICATION:	PFA : ASTM D 3418 / FEP : ASTM D 2116

PRIMARY SERVICE RATING & TEST PRESSURE				
CLASS	WORKING PRESS.	HYD. TEST PRESSURE		
		BODY	SEAT	TEMP.
150	100 PSIG	225 PSIG	150 PSIG	150/200˚C
AIR TEST-SEAT		80 PSIG ±10 PSIG; SPARK TEST : 10 KVA		

FLUSH TANK BOTTOM VALVE DISC OPENING INTO THE TANK DIAPHRAGM ACTUATED LONG HUB TOP MOUNT													
SIZE (mm)		Approx	H	D	Approx	Approx			(FLANGE DIMENSIONS)		(FLANGE DIMENSIONS)		WT./KG.
IN	OUT	L = A+B+C			W	A	B	C	I	T	O	T1	FOR VALVE ONLY
1.1/2"	1"		TO BE SPECIFIED BY CLIENT	TO BE SPECIFIED BY CLIENT	140	157	100		AS PER 1.1/2" NB ASA 150#	14	AS PER 1" NB ASA 150#	11	10
2"	1.1/2"				165	183	110		AS PER 2" NB ASA 150#	16	AS PER 1.1/2" NB ASA 150#	14	13
3"	2"				176	203	125		AS PER 3" NB ASA 150#	19	AS PER 2" NB ASA 150#	16	16
4"	3"				210	210	150		AS PER 4" NB ASA 150#	24	AS PER 3" NB ASA 150#	19	22
4"	2"				235	203	150		AS PER 4" NB ASA 150#	24	AS PER 2" NB ASA 150#	16	20
6"	4"				260	260	150		AS PER 6" NB ASA 150#	25	AS PER 4" NB ASA 150#	24	38

DIAPHRAGM ACTUATED FEP / PFA LINED FLUSH TANK BOTTOM VALVE 'Y' TYPE OPEN UP 150# SHORT HUB TOP MOUNT

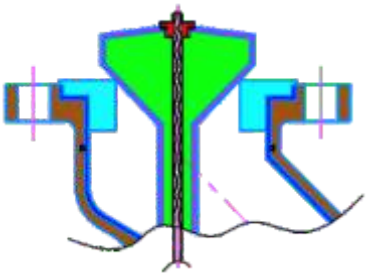

PROVISION RTD SENSOR

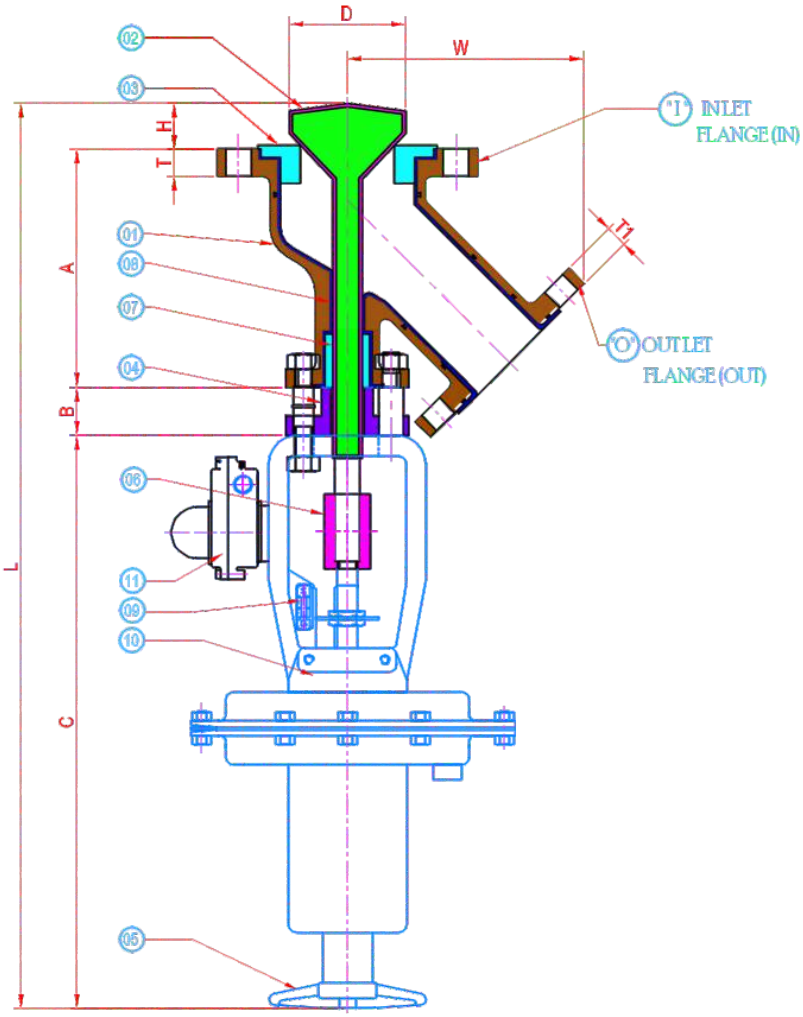

SR. NO.	DESCRIPTION	MATERIAL	QTY.
01	BODY	ASTM A216 WCB, ASTM A351 / CF8 / CF8M x FEP / PFA LINED	1
02	DISC & STEM	AISI SS 304 x FEP / PFA LINED	1
03	SEAT	PTFE / GLASS FILED PTFE	1
04	GLAND	CS / CF 8	1
05	MANUAL OVER RIDE	CS BODY	1
06	COUPLER	MS / SS	1
07	GLAND PACKING	PTFE/GF/CF PTFE WITH PTFE ROPE	1
08	LINING	3 TO 5MM-FEP OR PFA LINING	1
09	SOLENOID	ALUMINIUM BODY, 3/2 OR 5/2 WAY	1
10	DIAPHGRAM ACTUATOR	CS BODY WITH EPDM DIAPHRAGM DIRECT / REVERSE ACTING	1
11	LIMIT SWITCH	ALUMINIUM BODY, WITH DOME INDICATOR	1

TECHNICAL DATA	
DESIGN & MANUFACTURING STD.	MANUFACTURER'S STD.
TESTING & INSPECTION STD.	API 598
END CONNECTIONS :	FLANGED AS PER ANSI B-16.5
STANDARD RESIN SPECIFICATION:	PFA : ASTM D 3418 / FEP : ASTM D 2116

PRIMARY SERVICE RATING & TEST PRESSURE				
CLASS	WORKING PRESS.	HYD. TEST PRESSURE		
		BODY	SEAT	TEMP.
150	100 PSIG	225 PSIG	150 PSIG	150/200˚C
AIR TEST-SEAT		80 PSIG ±10 PSIG; SPARK TEST : 10 KVA		

FLUSH TANK BOTTOM VALVE DISC OPENING INTO THE TANK DIAPHRAGM ACTUATED SHORT HUB TOP MOUNT													
SIZE (mm)		Approx	H	D	Approx	Approx			(FLANGE DIMENSIONS)		(FLANGE DIMENSIONS)		WT./KG.
IN	OUT	L = A+B+C			W	A	B	C	I	T	O	T1	FOR VALVE ONLY
1.1/2"	1"		TO BE SPECIFIED BY CLIENT	TO BE SPECIFIED BY CLIENT	140	157	100		AS PER 1.1/2" NB ASA 150#	14	AS PER 1" NB ASA 150#	11	10
2"	1.1/2"				165	183	110		AS PER 2" NB ASA 150#	16	AS PER 1.1/2" NB ASA 150#	14	13
3"	2"				176	203	125		AS PER 3" NB ASA 150#	19	AS PER 2" NB ASA 150#	16	16
4"	3"				210	210	150		AS PER 4" NB ASA 150#	24	AS PER 3" NB ASA 150#	19	22
4"	2"				235	203	150		AS PER 4" NB ASA 150#	24	AS PER 2" NB ASA 150#	16	20
6"	4"				260	260	150		AS PER 6" NB ASA 150#	25	AS PER 4" NB ASA 150#	24	38

FEP / PFA LINED FLUSH BOTTOM VALVE OPEN DOWN 150# DIAPHRAGM ACTUATED LONG HUB TOP MOUNT

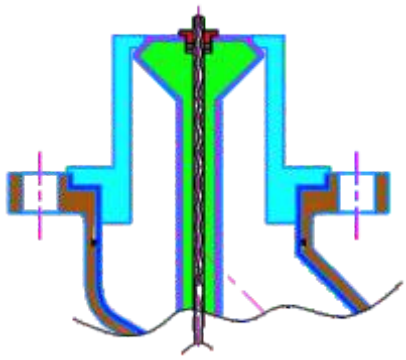

PROVISION RTD SENSOR

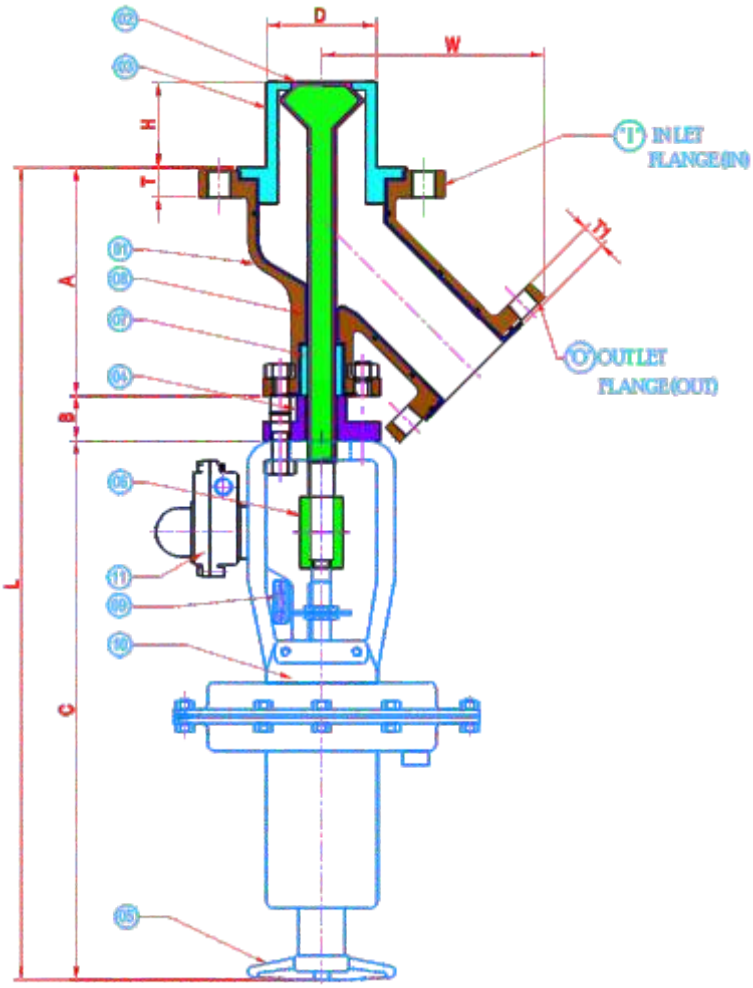

SR. NO.	DESCRIPTION	MATERIAL	QTY.
01	BODY	ASTM A216 WCB, ASTM A351 / CF8 / CF8M x FEP / PFA LINED	1
02	DISC & STEM	AISI SS 304 x FEP / PFA LINED	1
03	SEAT	PTFE / GLASS FILED PTFE	1
04	GLAND	CS / CF 8	1
05	MANUAL OVER RIDE	CS BODY	1
06	COUPLER	MS / SS	1
07	GLAND PACKING	PTFE/GF/CF PTFE WITH PTFE ROPE	1
08	LINING	3 TO 5MM-FEP OR PFA LINING	1
09	SOLENOID	ALUMINIUM BODY 3/2 OR 5/2 WAY	1
10	DIAPHGRAM ACTUATOR	CS BODY WITH EPDM DIAPHRAGM DIRECT / REVERSE ACTING	1
11	LIMIT SWITCH	ALUMINIUM BODY, WITH DOME INDICATOR	1

TECHNICAL DATA	
DESIGN & MANUFACTURING STD.	MANUFACTURER'S STD.
TESTING & INSPECTION STD.	API 598
END CONNECTIONS :	FLANGED AS PER ANSI B-16.5
STANDARD RESIN SPECIFICATION:	PFA : ASTM D 3418 / FEP : ASTM D 2116

PRIMARY SERVICE RATING & TEST PRESSURE				
CLASS	WORKING PRESS.	HYD. TEST PRESSURE		
		BODY	SEAT	TEMP.
150	100 PSIG	225 PSIG	150 PSIG	150/200˚C
AIR TEST-SEAT		80 PSIG ±10 PSIG; SPARK TEST : 10 KVA		

FLUSH TANK BOTTOM VALVE DISC OPENING INTO THE VALVE DIAPHRAGM ACTUATED LONG HUB TOP MOUNT													
SIZE (mm)		Approx	H	D	Approx	Approx			(FLANGE DIMENSIONS)		(FLANGE DIMENSIONS)		WT./KG.
IN	OUT	L = A+B+C			W	A	B	C	I	T	O	T1	FOR VALVE ONLY
1.1/2"	1"		TO BE SPECIFIED BY CLIENT	TO BE SPECIFIED BY CLIENT	140	157	100		AS PER 1.1/2" NB ASA 150#	14	AS PER 1" NB ASA 150#	11	10
2"	1.1/2"				165	183	110		AS PER 2" NB ASA 150#	16	AS PER 1.1/2" NB ASA 150#	14	13
3"	2"				176	203	125		AS PER 3" NB ASA 150#	19	AS PER 2" NB ASA 150#	16	16
4"	3"				210	210	150		AS PER 4" NB ASA 150#	24	AS PER 3" NB ASA 150#	19	22
4"	2"				235	203	150		AS PER 4" NB ASA 150#	24	AS PER 2" NB ASA 150#	16	20
6"	4"				260	260	150		AS PER 6" NB ASA 150#	25	AS PER 4" NB ASA 150#	24	38

FEP / PFA LINED FLUSH BOTTOM VALVE OPEN DOWN 150# DIAPHRAGM OPT SHORT HUB TOP MOUNT

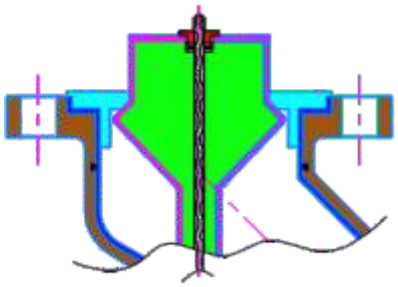

PROVISION RTD SENSOR

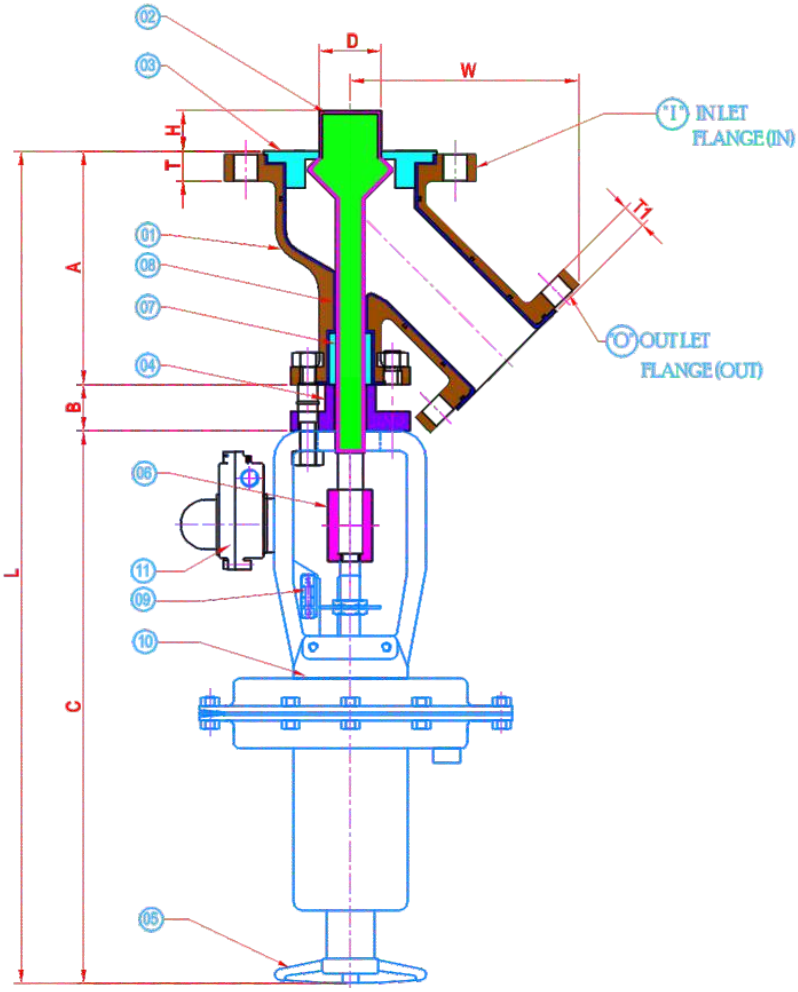

SR. NO.	DESCRIPTION	MATERIAL	QTY.
01	BODY	ASTM A216 WCB, ASTM A351 / CF8 / CF8M x FEP / PFA LINED	1
02	DISC & STEM	AISI SS 304 x FEP / PFA LINED	1
03	SEAT	PTFE / GLASS FILED PTFE	1
04	GLAND	CS / CF 8	1
05	MANUAL OVER RIDE	CS BODY	1
06	COUPLER	MS / SS	1
07	GLAND PACKING	PTFE/GF/CF PTFE WITH PTFE ROPE	1
08	LINING	3 TO 5MM-FEP OR PFA LINING	1
09	SOLENOID	ALUMINIUM BODY 3/2 OR 5/2 WAY	1
10	DIAPHGRAM ACTUATOR	CS BODY WITH EPDM DIAPHRAGM DIRECT / REVERSE ACTING	1
11	LIMIT SWITCH	ALUMINIUM BODY, WITH DOME INDICATOR	1

TECHNICAL DATA	
DESIGN & MANUFACTURING STD.	MANUFACTURER'S STD.
TESTING & INSPECTION STD.	API 598
END CONNECTIONS :	FLANGED AS PER ANSI B-16.5
STANDARD RESIN SPECIFICATION:	PFA : ASTM D 3418 / FEP : ASTM D 2116

PRIMARY SERVICE RATING & TEST PRESSURE				
CLASS	WORKING PRESS.	HYD. TEST PRESSURE		
		BODY	SEAT	TEMP.
150	100 PSIG	225 PSIG	150 PSIG	150/200˚C
AIR TEST-SEAT		80 PSIG ±10 PSIG; SPARK TEST : 10 KVA		

FLUSH TANK BOTTOM VALVE DISC OPENING INTO THE VALVE DIAPHRAGM ACTUATED SHORT HUB TOP MOUNT

SIZE (mm)		Approx	H	D	Approx	Approx			(FLANGE DIMENSIONS)		(FLANGE DIMENSIONS)		WT./KG.
IN	OUT	L = A+B+C			W	A	B	C	I	T	O	T1	FOR VALVE ONLY
1.1/2"	1"		TO BE SPECIFIED BY CLIENT	TO BE SPECIFIED BY CLIENT	140	157	100		AS PER 1.1/2" NB ASA 150#	14	AS PER 1" NB ASA 150#	11	10
2"	1.1/2"				165	183	110		AS PER 2" NB ASA 150#	16	AS PER 1.1/2" NB ASA 150#	14	13
3"	2"				176	203	125		AS PER 3" NB ASA 150#	19	AS PER 2" NB ASA 150#	16	16
4"	3"				210	210	150		AS PER 4" NB ASA 150#	24	AS PER 3" NB ASA 150#	19	22
4"	2"				235	203	150		AS PER 4" NB ASA 150#	24	AS PER 2" NB ASA 150#	16	20
6"	4"				260	260	150		AS PER 6" NB ASA 150#	25	AS PER 4" NB ASA 150#	24	38

DIAPHRAGM ACTUATED FEP / PFA LINED FLUSH TANK BOTTOM VALVE 'Y' TYPE OPEN UP 150# LONG HUB SIDE MOUNT

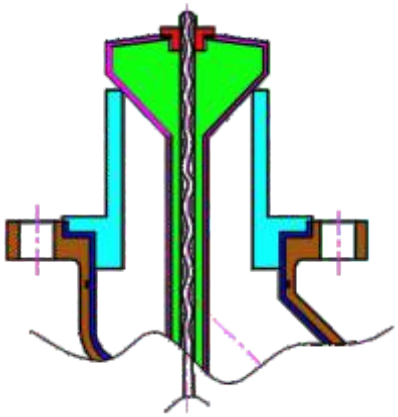

PROVISION RTD SENSOR

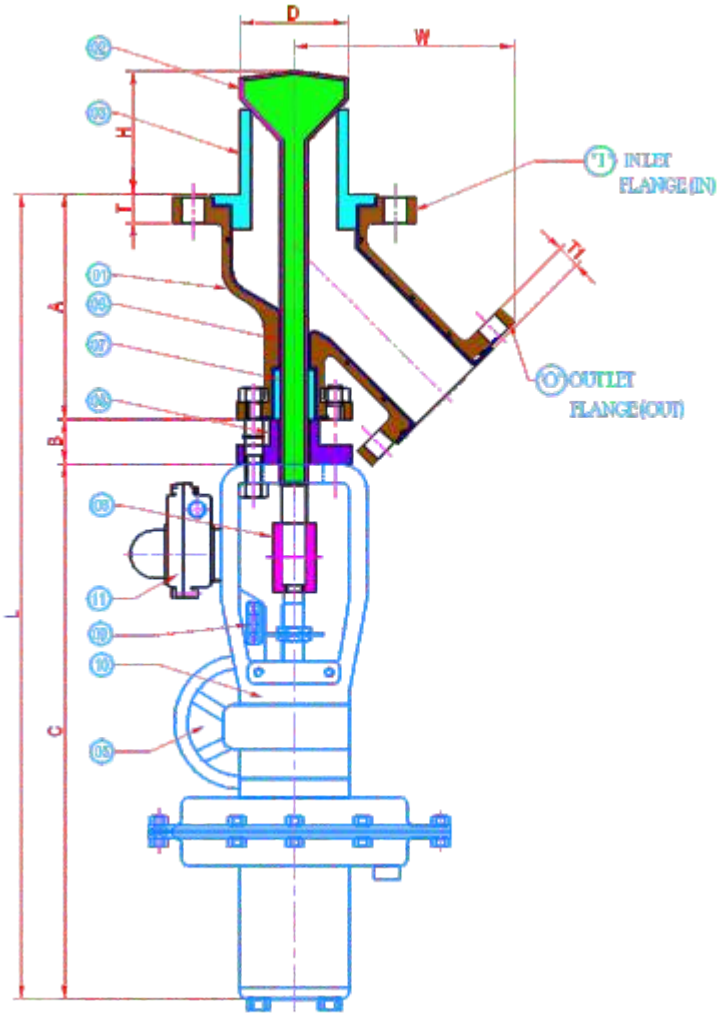

SR. NO.	DESCRIPTION	MATERIAL	QTY.
01	BODY	ASTM A216 WCB, ASTM A351 / CF8 / CF8M x FEP / PFA LINED	1
02	DISC & STEM	AISI SS 304 x FEP / PFA LINED	1
03	SEAT	PTFE / GLASS FILED PTFE	1
04	GLAND	CS / CF 8	1
05	MANUAL OVER RIDE	CS BODY	1
06	COUPLER	MS / SS	1
07	GLAND PACKING	PTFE/GF/CF PTFE WITH PTFE ROPE	1
08	LINING	3 TO 5MM-FEP OR PFA LINING	1
09	SOLENOID VALVE	ALUMINIUM BODY, 3/2 OR 5/2 WAY	1
10	DIAPHGRAM ACTUATOR	CS BODY WITH EPDM DIAPHRAGM DIRECT / REVERSE ACTING	1
11	LIMIT SWITCH	ALUMINIUM BODY, WITH DOME INDICATOR	1

TECHNICAL DATA	
DESIGN & MANUFACTURING STD.	MANUFACTURER'S STD.
TESTING & INSPECTION STD.	API 598
END CONNECTIONS :	FLANGED AS PER ANSI B-16.5
STANDARD RESIN SPECIFICATION:	PFA : ASTM D 3418 / FEP : ASTM D 2116

PRIMARY SERVICE RATING & TEST PRESSURE				
CLASS	WORKING PRESS.	HYD. TEST PRESSURE		
		BODY	SEAT	TEMP.
150	100 PSIG	225 PSIG	150 PSIG	150/200˚C
AIR TEST-SEAT		80 PSIG ±10 PSIG; SPARK TEST : 10 KVA		

FLUSH TANK BOTTOM VALVE DISC OPENING INTO THE TANK DIAPHRAGM ACTUATED LONG HUB SIDE MOUNT													
SIZE (mm)		Approx	H	D	Approx	Approx			(FLANGE DIMENSIONS)		(FLANGE DIMENSIONS)		WT./KG.
IN	OUT	L = A+B+C			W	A	B	C	I	T	O	T1	FOR VALVE ONLY
1.1/2"	1"		TO BE SPECIFIED BY CLIENT	TO BE SPECIFIED BY CLIENT	140	157	100		AS PER 1.1/2" NB ASA 150#	14	AS PER 1" NB ASA 150#	11	10
2"	1.1/2"				165	183	110		AS PER 2" NB ASA 150#	16	AS PER 1.1/2" NB ASA 150#	14	13
3"	2"				176	203	125		AS PER 3" NB ASA 150#	19	AS PER 2" NB ASA 150#	16	16
4"	3"				210	210	150		AS PER 4" NB ASA 150#	24	AS PER 3" NB ASA 150#	19	22
4"	2"				235	203	150		AS PER 4" NB ASA 150#	24	AS PER 2" NB ASA 150#	16	20
6"	4"				260	260	150		AS PER 6" NB ASA 150#	25	AS PER 4" NB ASA 150#	24	38

FEP / PFA LINED FLUSH TANK BOTTOM VALVE OPEN UP 150# DIAPHRAGM ACTUATED SHORT HUB SIDE MOUNT

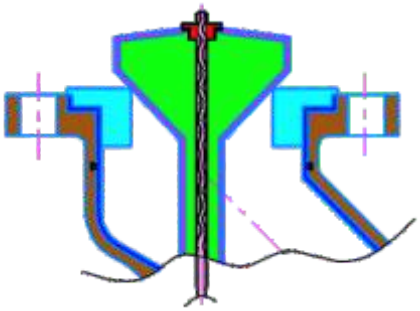

PROVISION RTD SENSOR

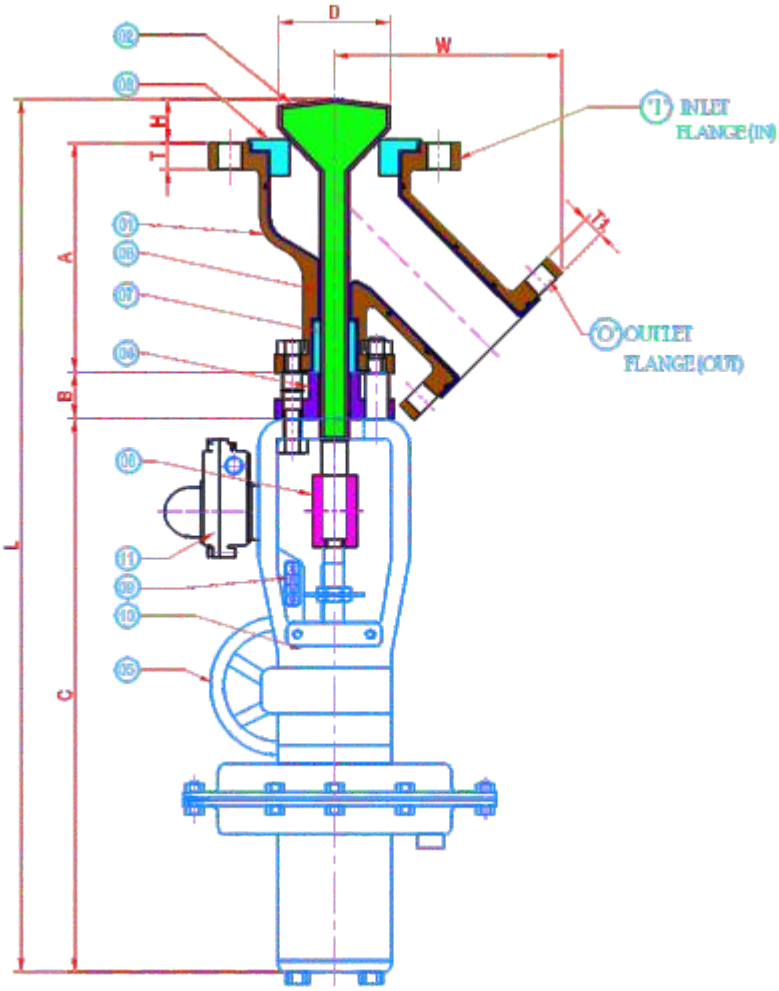

SR. NO.	DESCRIPTION	MATERIAL	QTY.
01	BODY	ASTM A216 WCB, ASTM A351 / CF8 / CF8M x FEP / PFA LINED	1
02	DISC & STEM	AISI SS 304 x FEP / PFA LINED	1
03	SEAT	PTFE / GLASS FILED PTFE	1
04	GLAND	CS / CF 8	1
05	MANUAL OVER RIDE	CS BODY	1
06	COUPLER	MS / SS	1
07	GLAND PACKING	PTFE/GF/CF PTFE WITH PTFE ROPE	1
08	LINING	3 TO 5MM-FEP OR PFA LINING	1
09	SOLENOID	ALUMINIUM BODY, 3/2 OR 5/2 WAY	1
10	DIAPHGRAM ACTUATOR	CS BODY WITH EPDM DIAPHRAGM DIRECT / REVERSE ACTING	1
11	LIMIT SWITCH	ALUMINIUM BODY, WITH DOME INDICATOR	1

TECHNICAL DATA	
DESIGN & MANUFACTURING STD.	MANUFACTURER'S STD.
TESTING & INSPECTION STD.	API 598
END CONNECTIONS :	FLANGED AS PER ANSI B-16.5
STANDARD RESIN SPECIFICATION:	PFA : ASTM D 3418 / FEP : ASTM D 2116

PRIMARY SERVICE RATING & TEST PRESSURE				
CLASS	WORKING PRESS.	HYD. TEST PRESSURE		
		BODY	SEAT	TEMP.
150	100 PSIG	225 PSIG	150 PSIG	150/200˚C
AIR TEST-SEAT		80 PSIG ±10 PSIG; SPARK TEST : 10 KVA		

FLUSH TANK BOTTOM VALVE DISC OPENING INTO THE TANK DIAPHRAGM ACTUATED SHORT HUB SIDE MOUNT													
SIZE (mm)		Approx	H	D	Approx	Approx			(FLANGE DIMENSIONS)		(FLANGE DIMENSIONS)		WT./KG.
IN	OUT	L = A+B+C			W	A	B	C	I	T	O	T1	FOR VALVE ONLY
1.1/2"	1"		TO BE SPECIFIED BY CLIENT	TO BE SPECIFIED BY CLIENT	140	157	100		AS PER 1.1/2" NB ASA 150#	14	AS PER 1" NB ASA 150#	11	10
2"	1.1/2"				165	183	110		AS PER 2" NB ASA 150#	16	AS PER 1.1/2" NB ASA 150#	14	13
3"	2"				176	203	125		AS PER 3" NB ASA 150#	19	AS PER 2" NB ASA 150#	16	16
4"	3"				210	210	150		AS PER 4" NB ASA 150#	24	AS PER 3" NB ASA 150#	19	22
4"	2"				235	203	150		AS PER 4" NB ASA 150#	24	AS PER 2" NB ASA 150#	16	20
6"	4"				260	260	150		AS PER 6" NB ASA 150#	25	AS PER 4" NB ASA 150#	24	38

FEP / PFA LINED FLUSH BOTTOM VALVE OPEN DOWN 150# DIAPHRAGM OPT LONG HUB SIDE MOUNT

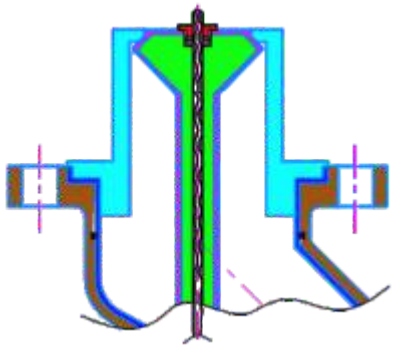

PROVISION RTD SENSOR

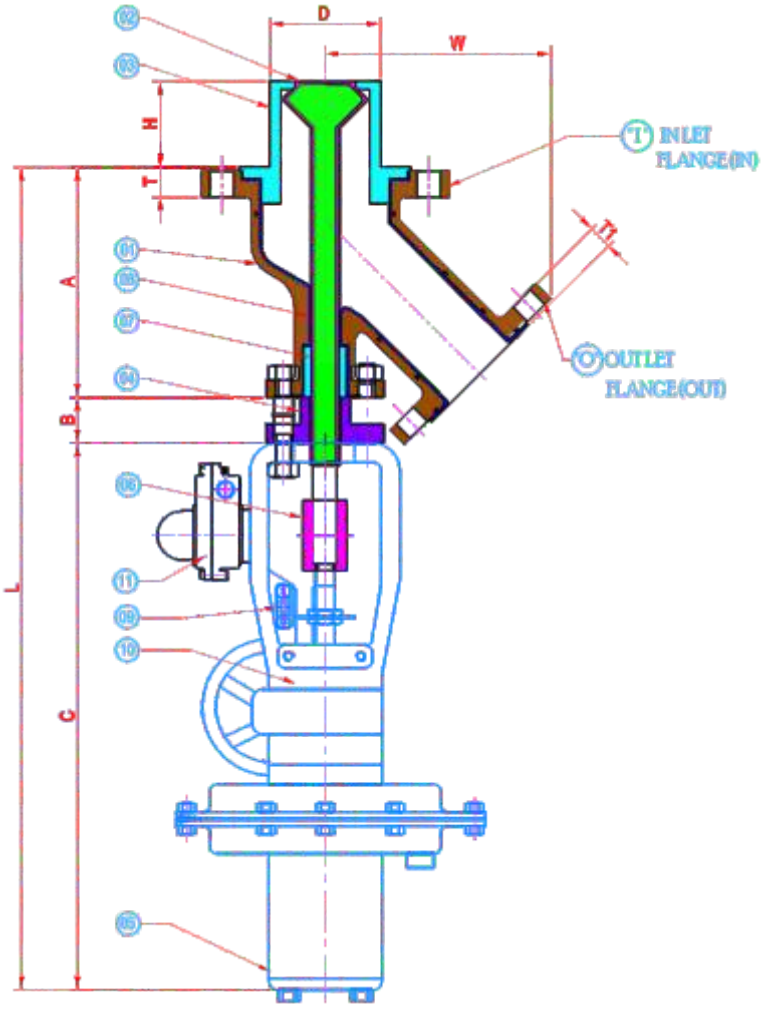

SR. NO.	DESCRIPTION	MATERIAL	QTY.
01	BODY	ASTM A216 WCB, ASTM A351 / CF8 / CF8M x FEP / PFA LINED	1
02	DISC & STEM	AISI SS 304 x FEP / PFA LINED	1
03	SEAT	PTFE / GLASS FILED PTFE	1
04	GLAND	CS / CF 8	1
05	MANUAL OVER RIDE	CS BODY	1
06	COUPLER	MS / SS	1
07	GLAND PACKING	PTFE/GF/CF PTFE WITH PTFE ROPE	1
08	LINING	3 TO 5MM-FEP OR PFA LINING	1
09	SOLENOID	ALUMINIUM BODY 3/2 OR 5/2 WAY	1
10	DIAPHGRAM ACTUATOR	CS BODY WITH EPDM DIAPHRAGM DIRECT / REVERSE ACTING	1
11	LIMIT SWITCH	ALUMINIUM BODY, WITH DOME INDICATOR	1

TECHNICAL DATA	
DESIGN & MANUFACTURING STD.	MANUFACTURER'S STD.
TESTING & INSPECTION STD.	API 598
END CONNECTIONS :	FLANGED AS PER ANSI B-16.5
STANDARD RESIN SPECIFICATION:	PFA : ASTM D 3418 / FEP : ASTM D 2116

PRIMARY SERVICE RATING & TEST PRESSURE				
CLASS	WORKING PRESS.	HYD. TEST PRESSURE		
		BODY	SEAT	TEMP.
150	100 PSIG	225 PSIG	150 PSIG	150/200˚C
AIR TEST-SEAT		80 PSIG ±10 PSIG; SPARK TEST : 10 KVA		

FLUSH TANK BOTTOM VALVE DISC OPENING INTO THE VALVE DIAPHRAGM ACTUATED LONG HUB SIDE MOUNT

SIZE (mm)		Approx	H	D	Approx	Approx			(FLANGE DIMENSIONS)		(FLANGE DIMENSIONS)		WT./KG.
IN	OUT	L = A+B+C			W	A	B	C	I	T	O	T1	FOR VALVE ONLY
1.1/2"	1"		TO BE SPECIFIED BY CLIENT	TO BE SPECIFIED BY CLIENT	140	157	100		AS PER 1.1/2" NB ASA 150#	14	AS PER 1" NB ASA 150#	11	10
2"	1.1/2"				165	183	110		AS PER 2" NB ASA 150#	16	AS PER 1.1/2" NB ASA 150#	14	13
3"	2"				176	203	125		AS PER 3" NB ASA 150#	19	AS PER 2" NB ASA 150#	16	16
4"	3"				210	210	150		AS PER 4" NB ASA 150#	24	AS PER 3" NB ASA 150#	19	22
4"	2"				235	203	150		AS PER 4" NB ASA 150#	24	AS PER 2" NB ASA 150#	16	20
6"	4"				260	260	150		AS PER 6" NB ASA 150#	25	AS PER 4" NB ASA 150#	24	38

FEP / PFA LINED FLUSH BOTTOM VALVE OPEN DN DIAPHRAGM OPT 150# SHORT HUB SIDE MOUNT

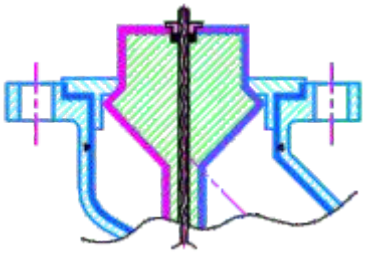

PROVISION RTD SENSOR

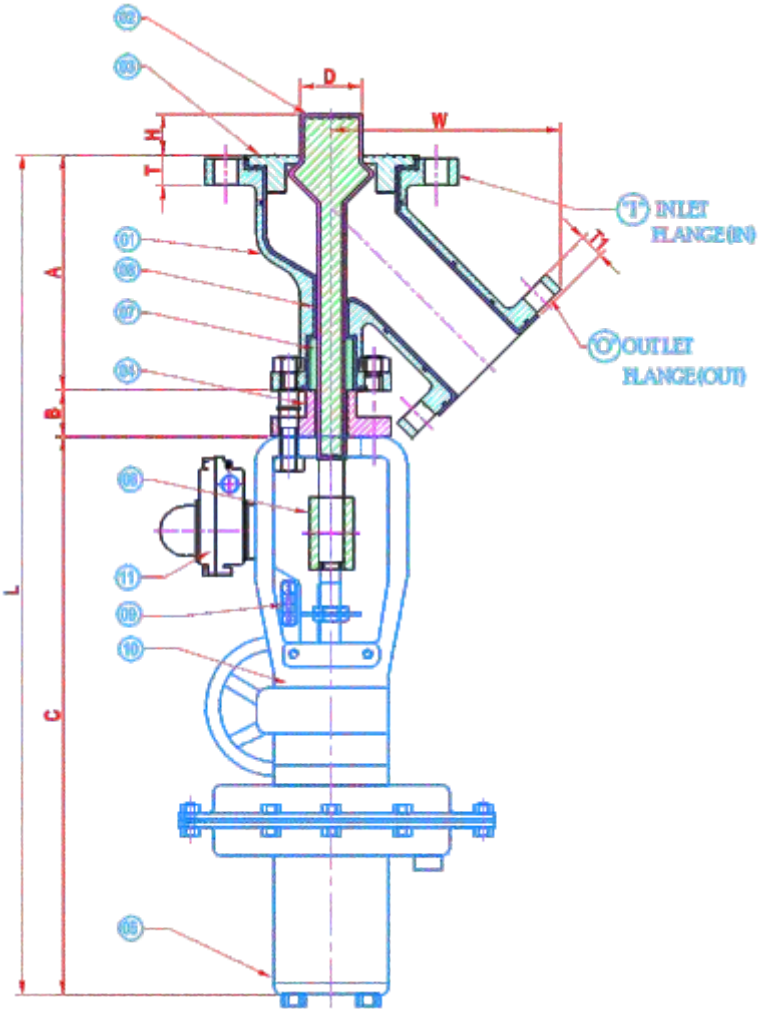

SR. NO.	DESCRIPTION	MATERIAL	QTY.
01	BODY	ASTM A216 WCB, ASTM A351 / CF8 / CF8M x FEP / PFA LINED	1
02	DISC & STEM	AISI SS 304 x FEP / PFA LINED	1
03	SEAT	PTFE / GLASS FILED PTFE	1
04	GLAND	CS / CF 8	1
05	MANUAL OVER RIDE	CS BODY	1
06	COUPLER	MS / SS	1
07	GLAND PACKING	PTFE/GF/CF PTFE WITH PTFE ROPE	1
08	LINING	3 TO 5MM-FEP OR PFA LINING	1
09	SOLENOID	ALUMINIUM BODY 3/2 OR 5/2 WAY	1
10	DIAPHGRAM ACTUATOR	CS BODY WITH EPDM DIAPHRAGM DIRECT / REVERSE ACTING	1
11	LIMIT SWITCH	ALUMINIUM BODY, WITH DOME INDICATOR	1

TECHNICAL DATA	
DESIGN & MANUFACTURING STD.	MANUFACTURER'S STD.
TESTING & INSPECTION STD.	API 598
END CONNECTIONS :	FLANGED AS PER ANSI B-16.5
STANDARD RESIN SPECIFICATION:	PFA : ASTM D 3418 / FEP : ASTM D 2116

PRIMARY SERVICE RATING & TEST PRESSURE				
CLASS	WORKING PRESS.	HYD. TEST PRESSURE		
		BODY	SEAT	TEMP.
150	100 PSIG	225 PSIG	150 PSIG	150/200˚C
AIR TEST-SEAT		80 PSIG ±10 PSIG; SPARK TEST : 10 KVA		

FLUSH TANK BOTTOM VALVE DISC OPENING INTO THE VALVE DIAPHRAGM ACTUATED SHORT HUB SIDE MOUNT													
SIZE (mm)		Approx	H	D	Approx	Approx			(FLANGE DIMENSIONS)		(FLANGE DIMENSIONS)		WT./KG.
IN	OUT	L = A+B+C			W	A	B	C	I	T	O	T1	FOR VALVE ONLY
1.1/2"	1"		TO BE SPECIFIED BY CLIENT	TO BE SPECIFIED BY CLIENT	140	157	100		AS PER 1.1/2" NB ASA 150#	14	AS PER 1" NB ASA 150#	11	10
2"	1.1/2"				165	183	110		AS PER 2" NB ASA 150#	16	AS PER 1.1/2" NB ASA 150#	14	13
3"	2"				176	203	125		AS PER 3" NB ASA 150#	19	AS PER 2" NB ASA 150#	16	16
4"	3"				210	210	150		AS PER 4" NB ASA 150#	24	AS PER 3" NB ASA 150#	19	22
4"	2"				235	203	150		AS PER 4" NB ASA 150#	24	AS PER 2" NB ASA 150#	16	20
6"	4"				260	260	150		AS PER 6" NB ASA 150#	25	AS PER 4" NB ASA 150#	24	38

FEP/ PFA LINED FLUSH BOTTOM BALL VALVE 150#

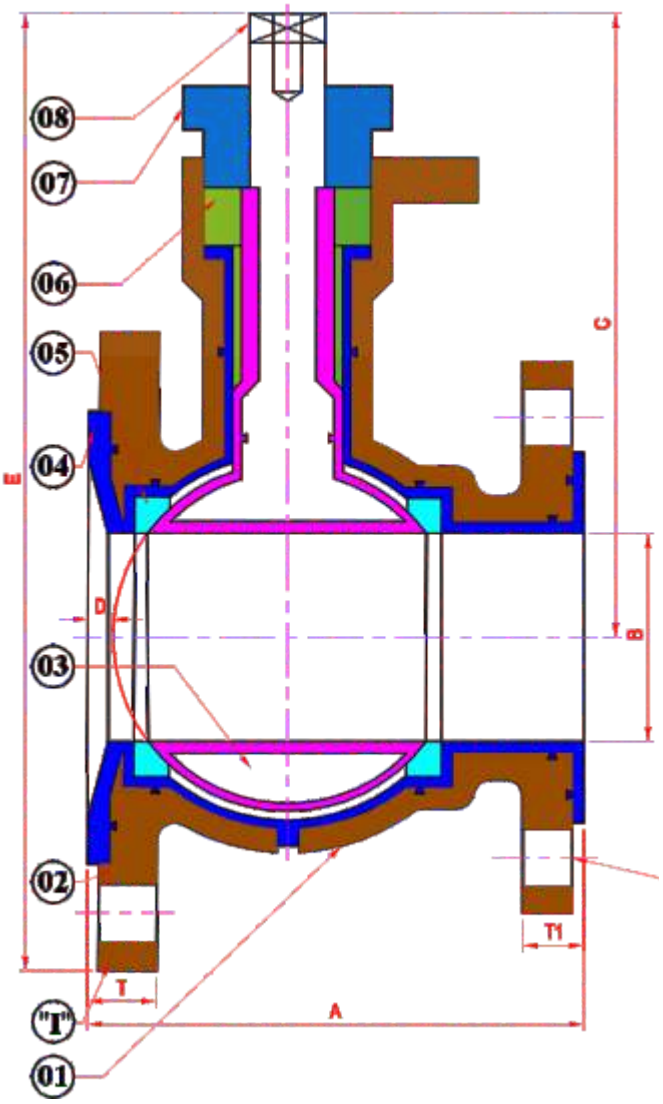

HANDLE OPTION

Valve Handle Position - 'L' Shape

Valve Handle Position - 'Angular45°'

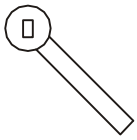

SR. NO.	DESCRIPTION	MATERIAL	QTY.
01	BODY	CS/CF8/CF8M X FEP/PFA LINED	1
02	ADAPTER	CF/CF8/CF8M X FEP/PFA LINED	1
03	BALL WITH STEM	CF8/CF8M X FEP/PFA LINED	1
04	LINING	FEP / PFA LINING 3 TO 5 MM	1
05	SEAT RINGS	VIRGIN PTFE	2
06	GLAND RINGS	VIRGIN PTFE	3
07	GLAND PUSHER	CF - 8	1
08	LEVER	AISI SS 304 ANGULAR/"Z"	1

TECHNICAL DATA	
DESIGN & MANUFACTURING STD.	BS 5351 / ISO 17292
TESTING & INSPECTION STD.	API 598 / ISO 12266
FACE TO FACE :	AS PER ANSI B 16.10
END CONNECTIONS :	FLANGED AS PER ANSI B 16.5 150#.
STANDARD RESIN SPECIFICATION:	FEP : ASTM D 2116 / PFA : ASTM D 3307

PRIMARY SERVICE RATING & TEST PRESSURE				
CLASS	WORKING PRESS.	HYD. TEST PRESSURE		
		BODY	SEAT	TEMP.
150	100 PSIG	225 PSIG	150 PSIG	150/200˚C
AIR TEST-SEAT		80 PSIG ±10 PSIG; SPARK TEST : 10 KVA		

SIZE	CLASS 150#										
NB	A	B	C	INLET FLG "I"	OUT FLG "O"	T	T1	"D"	TORQ.	E	WT Kg.
2"X1.1/2"	127	35	140	2" ASA 150#	1.1/2" ASA 150#	16	14	08	40	216	07
3" X 2"	147	48	175	3" ASA 150#	2" ASA 150#	19	16	10	60	271	10
4" X 3"	172	72	230	4" ASA 150#	3" ASA 150#	24	19	12	110	345	18
6" X 4"	203	95	230	6" ASA 150#	4" ASA 150#	25	24	15	200	419	28

ACTUATED FEP/PFA LINED FLUSH BOTTOM BALL VALVE FLANGED ENDS 150#

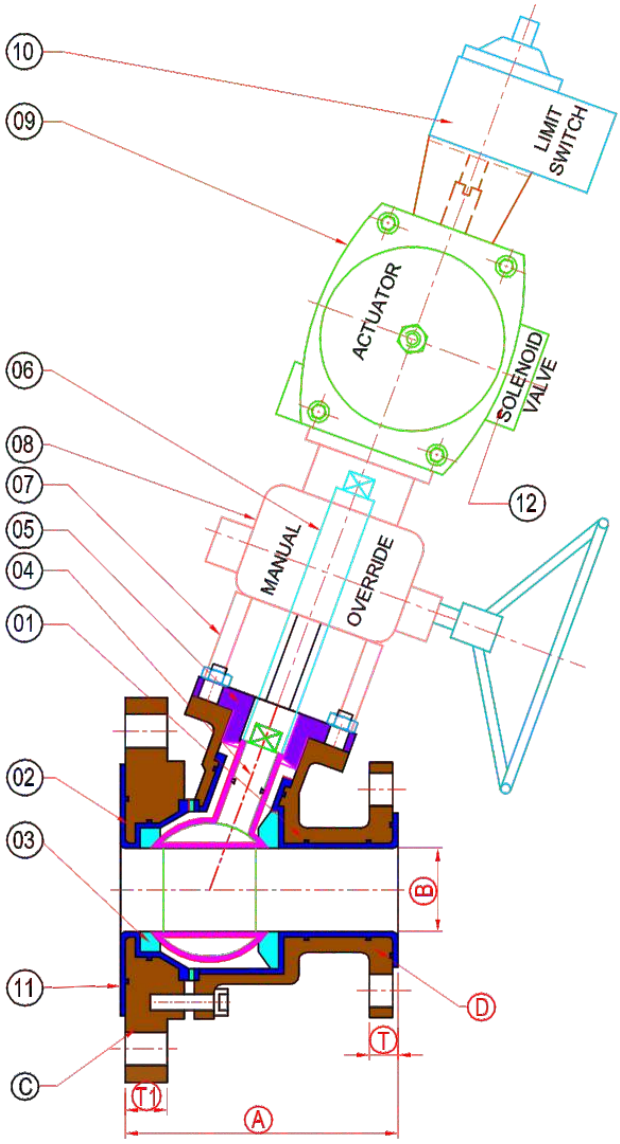

SIZE	1.1/2"x3"	2"x4"	3"x6"
A	130	160	200
B	38	50	76
C Flange as per	80NB 150#	100NB 150#	150NB 150#
D Flange as per	40NB 150#	50NB 150#	80NB 150#
T	14	16	24
T1	24	25	25

PRIMARY SERVICE RATING & TEST PRESSURE				
CLASS	WORKING PRESS.	HYD. TEST PRESSURE		
		BODY	SEAT	TEMP.
150	100 PSIG	225 PSIG	150 PSIG	150/200˚C
AIR TEST-SEAT		80 PSIG ±10 PSIG; SPARK TEST : 10 KVA		

TECHNICAL DATA	
DESIGN & MANUFACTURING STD.	BS 5351 / ISO 17292
TESTING & INSPECTION STD.	API 598 / ISO 12266
FACE TO FACE :	AS PER ANSI B 16.10
END CONNECTIONS :	FLANGED AS PER ANSI B 16.5 150#.
STANDARD RESIN SPECIFICATION:	FEP : ASTM D 2116 / PFA : ASTM D 3307

SR.	NOMENCLATURE	QTY.	MATERIAL
01	BODY	1	CF-8/ CF-8M X FEP/ PFA LINED
02	ADAPTER	1	CF-8/ CF-8M X FEP/ PFA LINED
03	SEAT RINGS	2	PTFE / GFT
04	STEM & BALL	1	CF8 / CF8M x FEP/ PFA LINED
05	GLAND	1	CF8
06	COUPLER	1	AISI SS 304
07	PILLAR / BRACKET	4/1	AISI SS 304
08	MANUAL OVERRIDE	1	CI BODY
09	ACTUATOR	1	ALUMINIUM BODY S/A OR D/A
10	LIMIT SWITCH WITH INDICATOR DOME	1	ALUMINIUM BODY
11	LINING	1	3 TO 5 MM-FEP OR PFA LINING
12	SOLENOIDVALVE	1	ALUMINIUM BODY 3/2 OR 5/2

MANUALLY OPERATED FEP / PFA LINED BALL VALVE F/E 150#

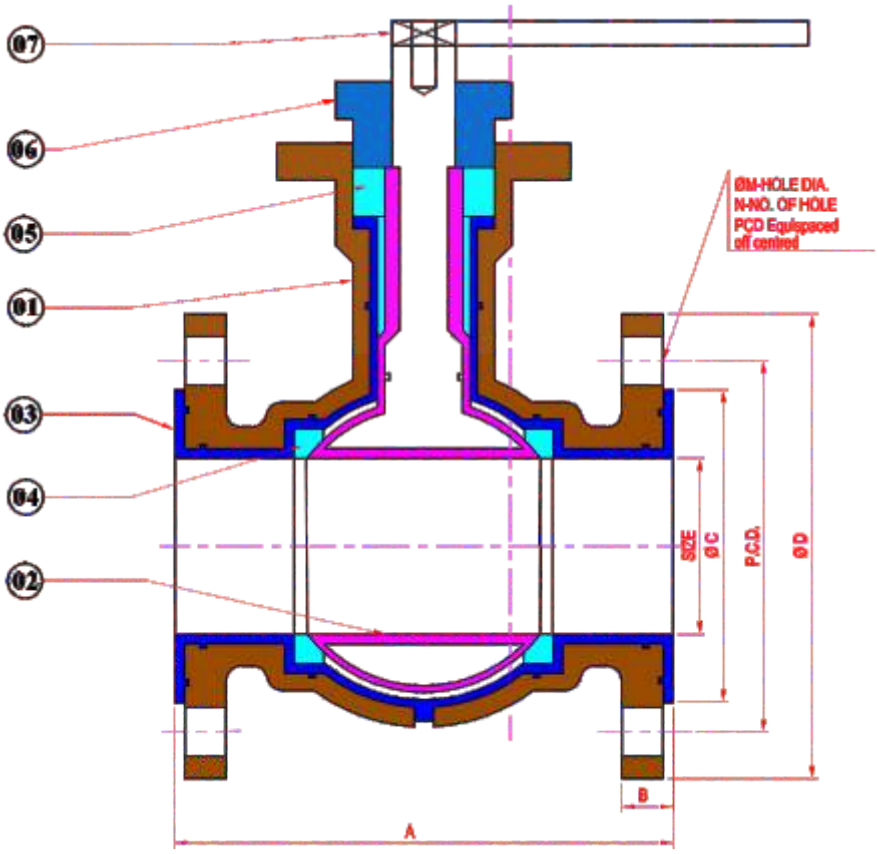

SR. NO.	DESCRIPTION	MATERIAL	QTY.
01	SPLIT BODY	CS/CF8/CF8MX FEP/PFA LINED	2
02	BALL WITH STEM	CF8/CF8M X FEP/PFA LINED	1
03	LINING	FEP/PFA LINING 3 TO 5 MM	1
04	SEAT RINGS	VIRGIN PTFE	2
05	GLAND RINGS	VIRGIN PTFE	3
06	GLAND PUSHER	CF - 8	1
07	MANUAL HAND LEVER	M.S. / SS	1

PRIMARY SERVICE RATING & TEST PRESSURE				
CLASS	WORKING PRESS.	HYD. TEST PRESSURE		
		BODY	SEAT	TEMP.
150	100 PSIG	225 PSIG	150 PSIG	150/200˚C
AIR TEST-SEAT		80 PSIG ±10 PSIG; SPARK TEST : 10 KVA		

TECHNICAL DATA	
DESIGN & MANUFACTURING STD.	BS 5351 / ISO 17292
TESTING & INSPECTION STD.	API 598 / ISO 12266
FACE TO FACE :	AS PER ANSI B 16.10
END CONNECTIONS :	FLANGED AS PER ANSI B 16.5 150#.
STANDARD RESIN SPECIFICATION:	FEP : ASTM D 2116 / PFA : ASTM D 3307

SIZE	CLASS - 150							TORQUE	WEIGHT
NB	A	B	øC	øD	øM	N	P.C.D.	NM	KG
3/4”	127	11.2	43	98	16	4	69.8	10	3.00
1”	127	11.2	51	108	16	4	79.2	10	4.00
1.1/2”	165	14.3	73	127	16	4	98.5	15	8.00
2”	178	16	92	152	19	4	120.6	21	10.00
3”	203	19	127	190.5	19	4	152.4	45	16.00
4”	229	24	157	229	19	8	190.5	210	24.00
6”	267	25	216	279	22	8	241.3	310	45.00

ACTUATED FEP / PFA LINED BALL VALVE F/E 150#

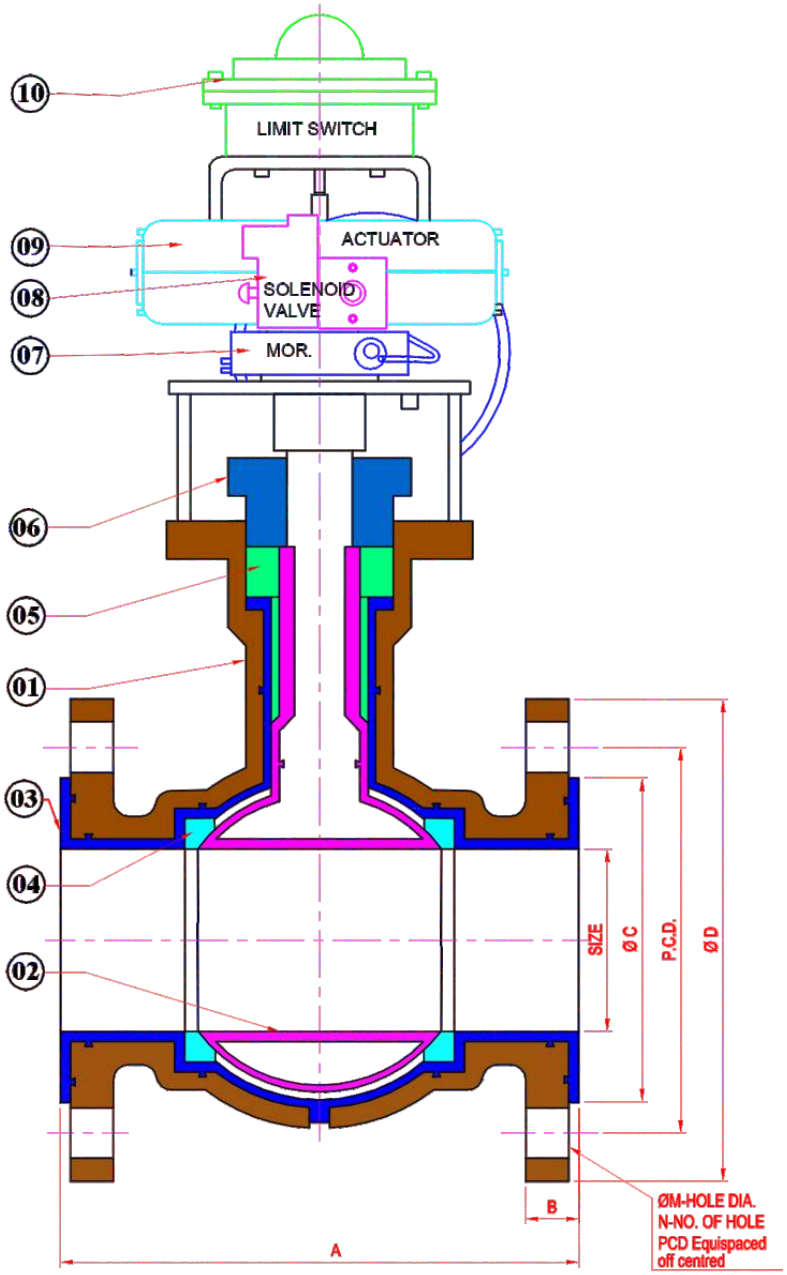

SR. NO.	DESCRIPTION	MATERIAL	QTY.
01	SPLIT BODY	CS/CF8/CF8MX FEP/PFA LINED	2
02	BALL WITH STEM	CF8/CF8M X FEP/PFA LINED	1
03	LINING	FEP/PFA LINING 3 TO 5 MM	1
04	SEAT RINGS	VIRGIN PTFE	2
05	GLAND RINGS	VIRGIN PTFE	3
06	GLAND PUSHER	CS / CF - 8	1
07	MANUAL OVER RIDE	C.I. BODY	1
08	SOLENDID VALVE	ALUMINIUM BODY 3/2 OR 5/2	1
09	ROTARY ACTUATOR	ALUMINIUM BODY S/A OR D/A	1
10	LIMIT SWITCH	ALUMINIUM BODY	1

PRIMARY SERVICE RATING & TEST PRESSURE				
CLASS	WORKING PRESS.	HYD. TEST PRESSURE		
		BODY	SEAT	TEMP.
150	100 PSIG	225 PSIG	150 PSIG	150/200˚C
AIR TEST-SEAT		80 PSIG ±10 PSIG; SPARK TEST : 10 KVA		

TECHNICAL DATA	
DESIGN & MANUFACTURING STD.	BS 5351 / ISO 17292
TESTING & INSPECTION STD.	API 598 / ISO 12266
FACE TO FACE :	AS PER ANSI B 16.10
END CONNECTIONS :	FLANGED AS PER ANSI B 16.5 150#.
STANDARD RESIN SPECIFICATION:	FEP : ASTM D 2116 / PFA : ASTM D 3307

SIZE	CLASS - 150							TORQUE	WEIGHT
NB	A	B	øC	øD	øM	N	P.C.D.	NM	KG/ONLY VALVE
3/4”	127	11.2	43	98	16	4	69.8	10	3.00
1”	127	11.2	51	108	16	4	79.2	10	4.00
1.1/2”	165	14.3	73	127	16	4	98.5	15	8.00
2”	178	16	92	152	19	4	120.6	21	10.00
3”	203	19	127	190.5	19	4	152.4	45	16.00
4”	229	24	157	229	19	8	190.5	210	24.00
6”	267	25	216	279	22	8	241.3	310	45.00

FEP / PFA LINED WAFFER TYPE SWING CHECK VALVE 150

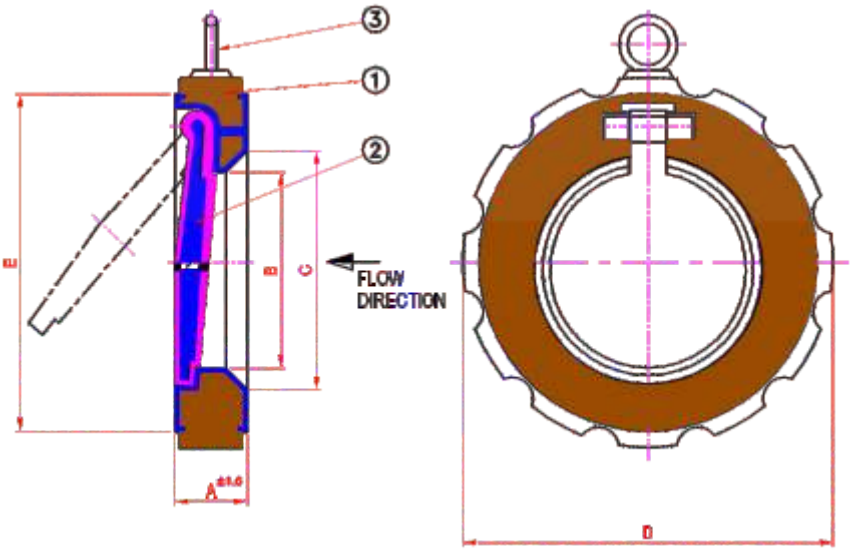

SR. NO.	DESCRIPTION	MATERIAL
01	BODY	CS / MS / SS 304 / SS 316 x FEP/PFA LINED
02	DISC	CS / MS / SS 304 / SS 316 x FEP/PFA LINED
03	EYE BOLT	C.S. / SS

TECHNICAL DATA	
TESTING & INSPECTION	SPARK TESTED FOR 10 KV & HYDRO TESTED AT 10 KG/CM2 & PAINTED WITH 2 COATES OF RED OXIDE PRIMER
PRESSURE RATING	VACUUME TO 6 KG/CM2
TEMP. RATING	-29˚C TO 200˚C
STD. RESIN SPECS.	FEP : ASTMD-2116 / PFA : ASTM D 3307

NB	A	B	C	D	E	APPROX WT/Kg
1.1/2”	30	20	35	95	70	2.9
2”	35	30	52	110	90	3.2
3”	46	42	64	142	124	4.2
4”	52	65	80	180	152	6.3
6”	56	111	233	233	207	12.2
8”	60	133	295	295	260	18.3
10”	68	184	348	348	317	29.4
12”	78	232	398	398	367	43.5

FEP/ PFA LINED BALL CHECK VALVE 150#

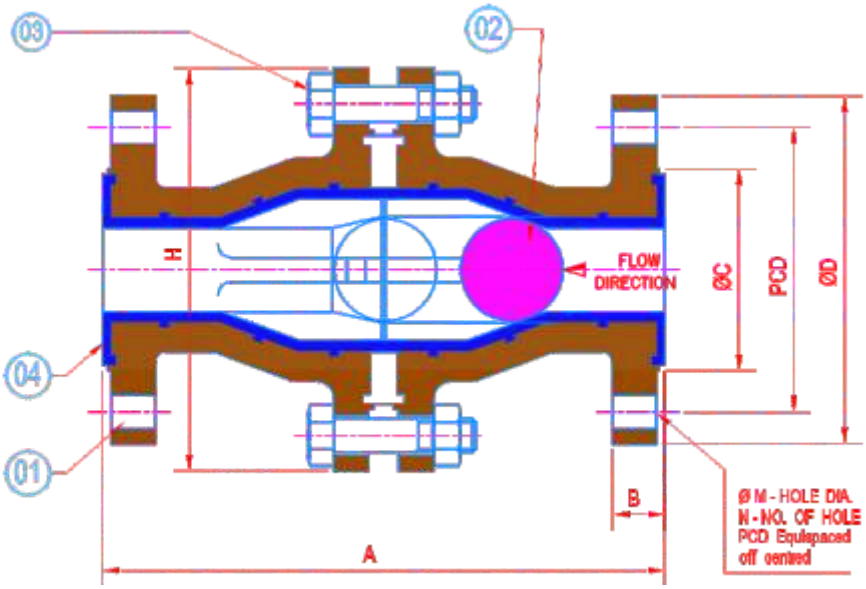

SR. NO.	DESCRIPTION	MATERIAL	QTY.
01	BODY	ASTM-A-216 GR.WCB. SGI-IS-GRD.-450/12 OR C.I.	2
02	BALL	SOLID PTFE	1
03	STUD & NUT	CARBON STEEL	–
04	LINING	PFA / FEP LINING 3 TO 5 MM	–

TECHNICAL DATA	
DESIGN & MANUFACTURING STD.	MANUFACTURER'S STD.
TESTING & INSPECTION STD.	API 598
FACE TO FACE :	AS PER ANSI B 16.10
END CONNECTIONS :	FLANGED AS PER ANSI B-16.5
STANDARD RESIN SPECIFICATION:	FEP : ASTM D 2116 / PFA : ASTM D 3307

PRIMARY SERVICE RATING & TEST PRESSURE				
CLASS	WORKING PRESS.	HYD. TEST PRESSURE		
		BODY	SEAT	TEMP.
150	150 PSIG	225 PSIG	150 PSIG	150/200˚C
AIR TEST-SEAT		80 PSIG ±10 PSIG; SPARK TEST : 10 KVA		

SIZE	CLASS 150#							
NB	A	B	ØC	ØD	ØM	N	P.C.D.	H
1 /2 “	120	11.2	43	98	16	4	69.8	105
3/4”	120	11.2	43	98	16	4	69.8	115
1”	140	11.2	51	108	16	4	79.2	125
1½ “	165	14.3	73	127	16	4	98.5	160
2”	178	16	92	152	19	4	120.6	175
3”	203	19	127	190.5	19	4	152.4	240
4”	229	24	157	229	19	8	190.5	270
6”	400	25	216	279	22	8	241.3	330
8”	600	25	216	279	22	8	241.3	–

PTFE LINED SIGHT TUBE GLASS QVF TYPE FLANGE END 150#

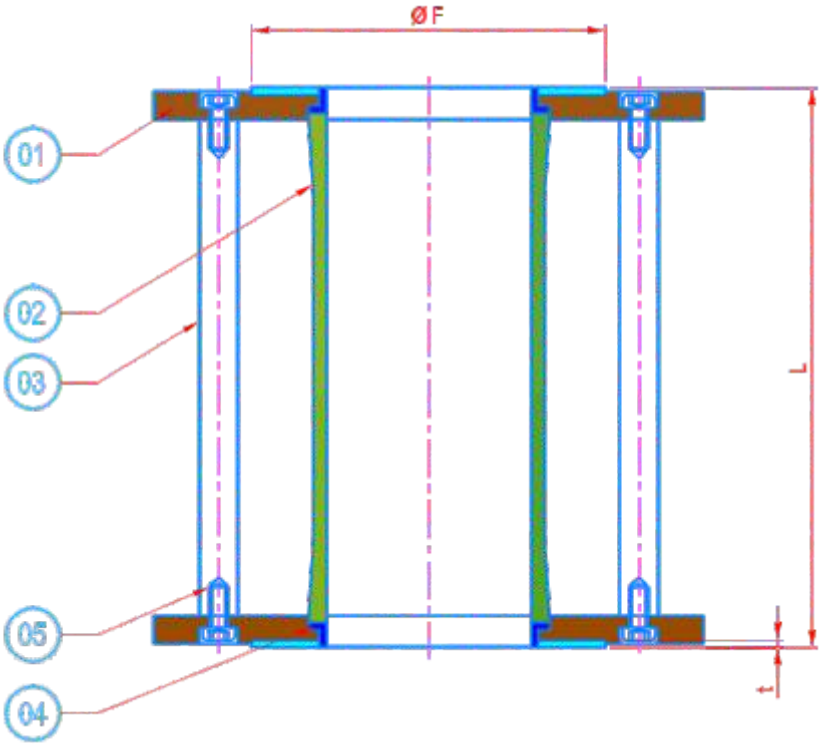

SR. NO.	PARTY NAME	MATERIAL	QTY.
01	BODY FLANGE	CS A 216 WCB / MS PLATE IS2062, SS 304 / 316 ANSI B 16.5 ASA 150#.	2
02	GLASS TUBE	BOROSILICATE	1
03	STUD	M.S. / S.S. 304	4/8
04	T BUSH	VIRGIN PTFE	2 SET
05	ALLAN BOLT	M.S. / S.S.	8/16

TECHNICAL DATA	
TESTING & INSPECTION	SPARK TESTED FOR 10 KV & HYDRO TESTED AT 3 KG/CM2 & PAINTED WITH 2 COATES OF RED OXIDE PRIMER
PRESSURE RATING	3 KG/CM2
TEMP. RATING	-29˚C TO 200˚C

SIZE	L	ØV	ØF	t
1”	115 / 165	25	51	5
1 ½”	122 / 172	38	73	5
2”	124 / 174	50	92	5
2 ½”	128 / 178	63	105	5
3”	128 / 178	75	127	5
4”	128 / 178	100	157	5
6”	130 / 180	150	216	5
8”	130 / 180	200	270	5

PTFE LINED DOUBLE WINDOW SIGHT TUBE GLASS FLANGE END 150#

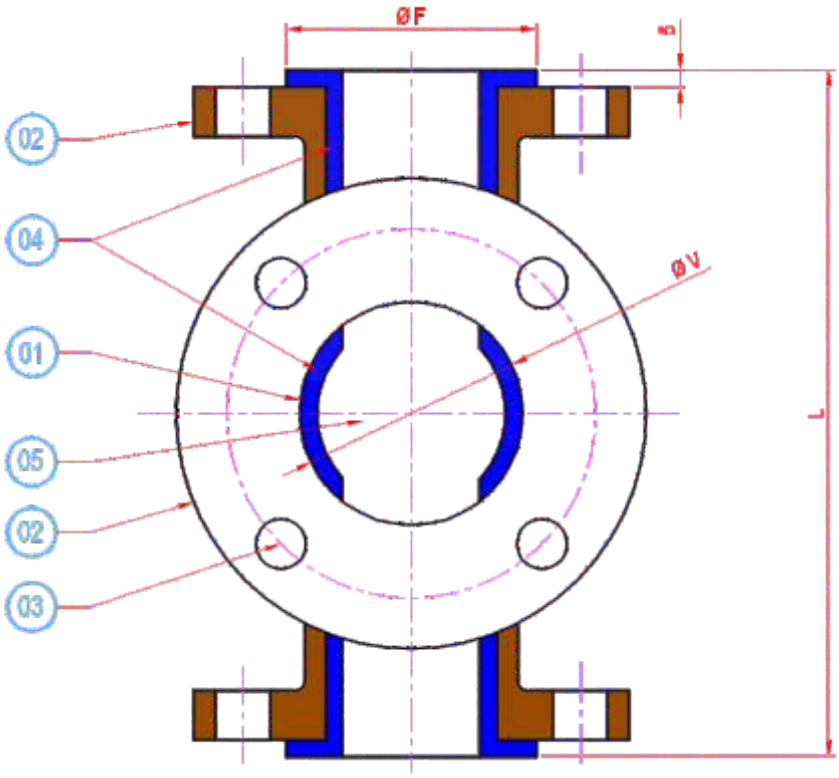

SR. NO.	PARTY NAME	MATERIAL	QTY.
01	BODY	CS WCB / SS 304 / 316 x FEP/PFA LINED	1
02	FLANGE	CS / MS / SS 304 / 316x FEP/PFA LINED ANSI B 16.5 ASA 150#	4
03	NUT & BOLT	M.S. / S.S. 304	8
04	PTFE LINERS / LINING	ISOSTATIC MOLDED WITH STD. RESIN AS PER ASTM D 1457 WHITE, PFA LINED TO ASTM D 3307 / OR FEP LINED TO ASTM D 2116 OR EQUIVALENT	1
05	GLASS	TOUGHNED GLASS	2

TECHNICAL DATA	
TESTING & INSPECTION	SPARK TESTED FOR 10 KV & HYDRO TESTED AT 10 KG/CM2 & PAINTED WITH 2 COATES OF RED OXIDE PRIMER
PRESSURE RATING	6 KG/CM2
TEMP. RATING	-29˚C TO 200˚C

SIZE	L	ØV	ØF	t
1”	160	38	48	5
1 ½”	200	65	69	5
2”	220	80	88	5
2 ½”	290	88	105	5
3”	310	100	118	5
4”	350	125	151	5
6”	406	135	204	5
8”	458	175	256	5

FEP / PFA LINED PLUG VALVE 150#

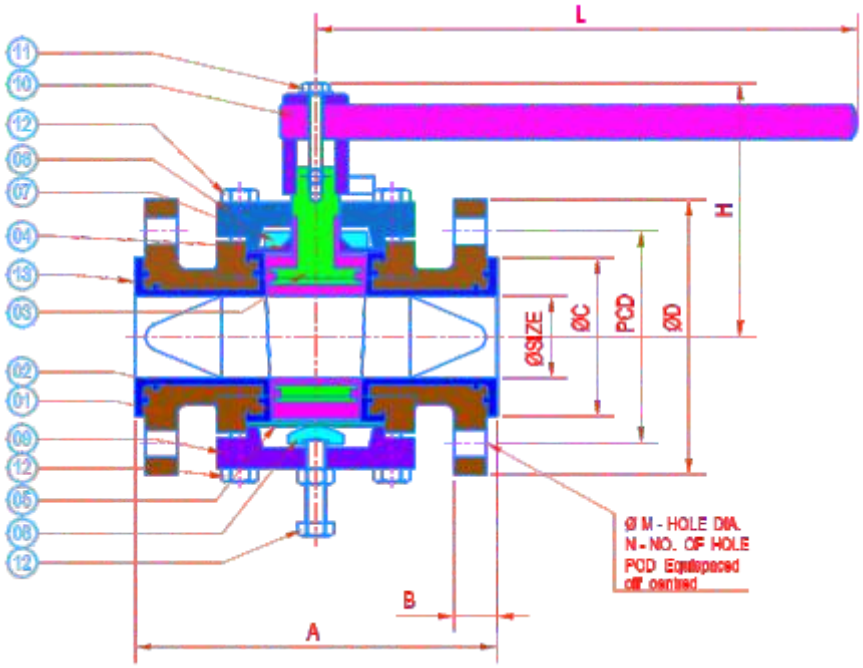

SR. NO.	DESCRIPTION	MATERIAL	QTY.
01	BODY	SGIRON/WCB/CF8/CF8M x FEP / PFA LINED	1
02	PLUG	WCB/SS x PFA/FEP	1
03	STEM	WCB/SS x PFA/FEP	1
04	SEAT RING	PTFE	1
05	GLAND PACKING	PTFE	1
06	GLAND WASHER	PTFE	1
07	WASHER	MS / SS	1
08	GLAND HOUSING	SPRING STEEL	1
09	BOTTOM HOUSING	CI	1
10	LEVER	MS / SS	–
11	LOCK BOLT	MS / SS	–
12	STUD & NUT	MS / SS	–
13	LINING	FEP/PFA LINING 3 TO 5 MM	–

TECHNICAL DATA	
DESIGN & MANUFACTURING STD.	MANUFACTURER'S STD.
TESTING & INSPECTION STD.	API 598
FACE TO FACE :	AS PER ANSI B 16.10
END CONNECTIONS :	FLANGED AS PER ANSI B-16.5
STANDARD RESIN SPECIFICATION:	FEP : ASTM D 2116 / PFA : ASTM D 3307

PRIMARY SERVICE RATING & TEST PRESSURE				
CLASS	WORKING PRESS.	HYD. TEST PRESSURE		
		BODY	SEAT	TEMP.
150	150 PSIG	225 PSIG	150 PSIG	150/200˚C
AIR TEST-SEAT		80 PSIG ±10 PSIG; SPARK TEST : 10 KVA		

SIZE	CLASS 150#								
NB	A	B	ØC	ØD	ØM	N	P.C.D.	H	L
1”	127	11.2	51	108	16	4	79.2	116	165
1.1/2”	165	14.3	73	127	16	4	98.5	135	255
2”	178	16	92	152	19	4	120.6	156	315
3”	203	19	127	190.5	19	4	152.4	172	415
4”	229	24	157	229	19	8	190.5	199	445
6”	279	25	216	279	22	8	241.3	220	500

FEP/ PFA LINED DIAPHRAGM VALVE 150#

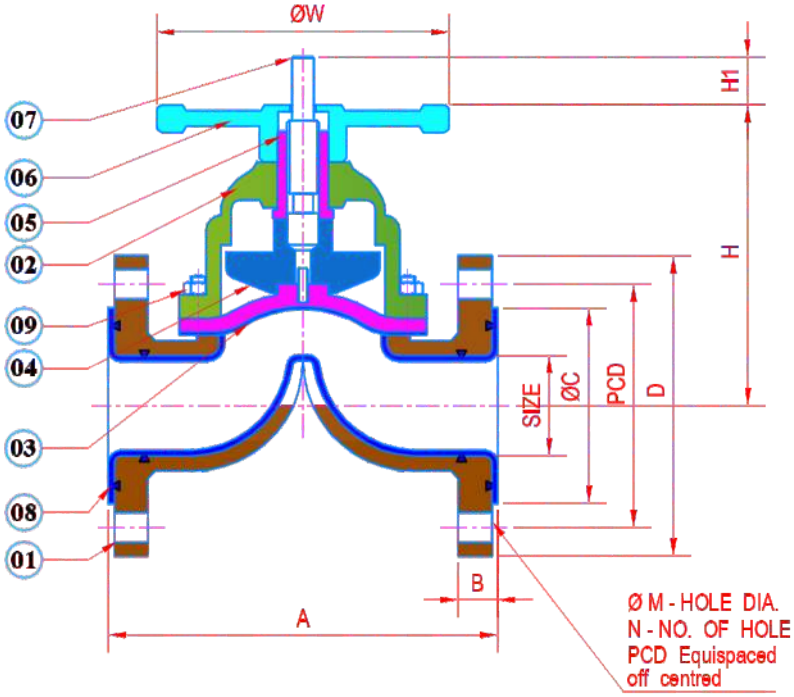

SR. NO.	PARTS NAME	MATERIAL	QTY.
01	BODY	DI/WCBxFEP/PFA LINED	1
02	BONNET	DI/WCBxFEP/PFA LINED	1
03	DIAPHRAGM	EPDM x PTFE	1
04	COMPRESSOR	DI / WCB	1
05	BUSHING (NUT)	GM ASTM B 62	1
06	HAND WHEEL	S G I / CS	1
07	SPINDLE	CARBON STEEL	1
08	LINING	PFA / FEP LINING 3 TO 5 MM	1
09	BONNET STUD & NUT	MS	4

TECHNICAL DATA	
DESIGN & MANUFACTURING STD.	BS 5351/ISO 17292
TESTING & INSPECTION STD.	API 598
FACE TO FACE :	AS PER ANSI B 16.10
END CONNECTIONS :	FLANGED AS PER ANSI B 16.5
STANDARD RESIN SPECIFICATION:	FEP : ASTM D 2116 / PFA : ASTM D 3307

PRIMARY SERVICE RATING & TEST PRESSURE				
CLASS	WORKING PRESS.	HYD. TEST PRESSURE		
		BODY	SEAT	TEMP.
150	150 PSIG	225 PSIG	150 PSIG	150/200˚C
AIR TEST-SEAT		80 PSIG ±10 PSIG; SPARK TEST : 10 KVA		

CLASS 150#										
NB	A	ØD	Ød	B	PCD	N	M	H	H1	W
1 /2”	108	89	35	11	60.4	4	16	76	9.5	70
3/4”	118	98	43	12.7	69.8	4	16	90	15	70
1”	127	108	51	14.2	79.2	4	16	108	17	100
1.1/4”	140	117	64	15.9	88.9	4	16	120	19	100
1.1/2”	165	127	73	17.5	98.5	4	16	142	21	114
2”	178	152	92	19	120.6	4	19	171	28	150
2.1/2”	191	178	105	22.3	139.7	4	19	200	32	150
3”	203	190	127	24	152.4	4	19	241	45	200
4”	229	229	157	24	190.5	8	19	273	60	250
5”	255	254	186	24	216	8	22	324	65	300
6”	267	279	216	25	241	8	22	368	80	350
8”	292	343	270	29	298	8	22	514	119	482

FEP / PFA LINED 'Y' TYPE STRAINERS FLANGE ENDS 150#

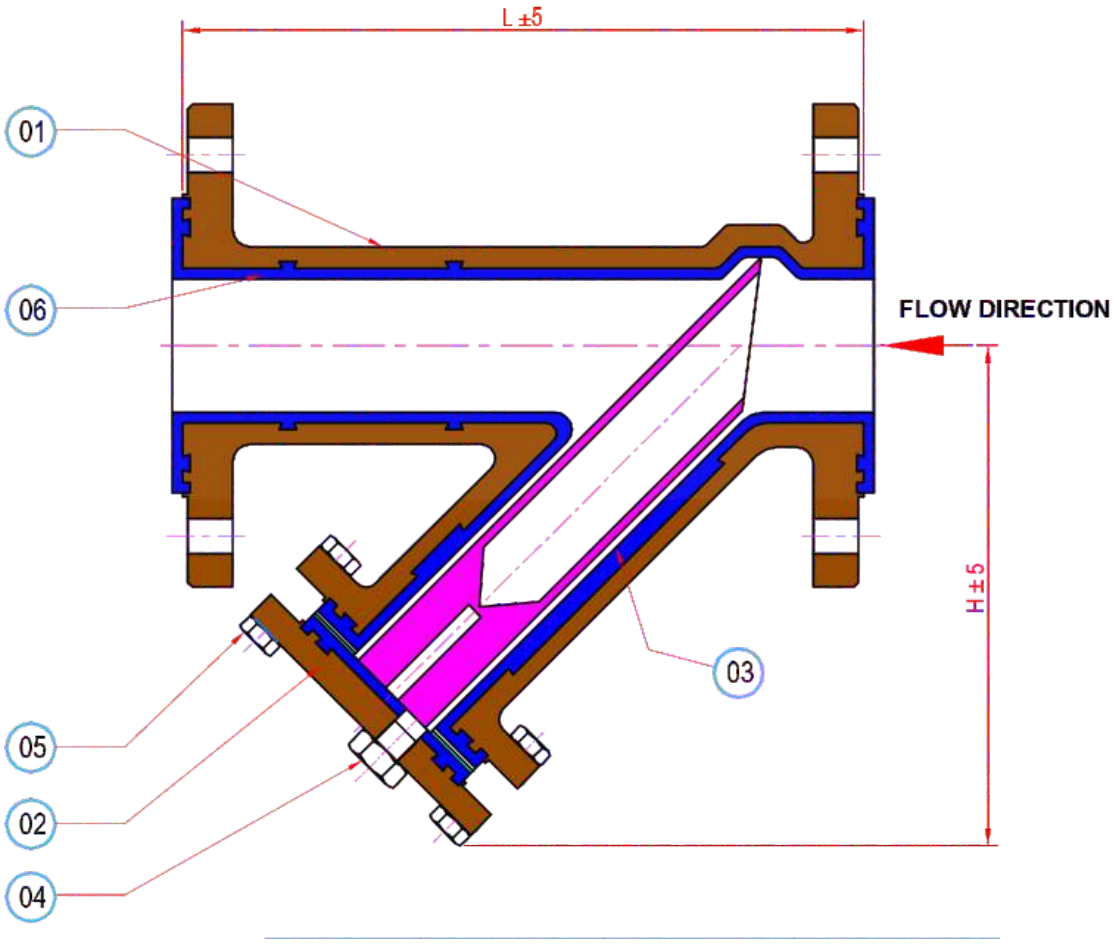

SR. NO.	PART NAME	MATERIAL	QTY.
01	BODY	CS / CF8 / CF8M x FEP / PFA LINED	1
02	BLIND FLANGE	CS / CF8 / CF8M x FEP / PFA LINED	1
03	SCREEN	40 / 100 MESH PTFE	1
04	DRAIN PLUG	S.S. 304 + PFA / FEP LINED	1
05	FASTENERS	S.S. 304 / CS	4
06	PTFE LINERS / LINING	3 TO 5 MM THK	1

TECHNICAL DATA	
TESTING & INSPECTION	SPARK TESTED FOR 10 KV & HYDRO TESTED AT 10 KG/CM2 & PAINTED WITH 2 COATES OF RED OXIDE PRIMER
PRESSURE RATING	VACUUME TO 6 KG/CM2
TEMP. RATING	-29˚C TO 260˚C

PRIMARY SERVICE RATING & TEST PRESSURE				
CLASS	WORKING PRESS.	HYD. TEST PRESSURE		
		BODY	SEAT	TEMP.
150	150 PSIG	225 PSIG	150 PSIG	150/200˚C
AIR TEST-SEAT		80 PSIG ±10 PSIG; SPARK TEST : 10 KVA		

SIZE	LINING THK (± 0.5)	L (± 5)	H (± 5)
1”	3	190	128
1 ½”	3	260	190
2”	3	284	203
2 ½ “	3	318	240
3”	3	348	257
4”	3	415	307
6”	3	508	370
8”	4	597	460

FEP / PFA LINED WAFFER TYPE BUTTERFLY VALVE

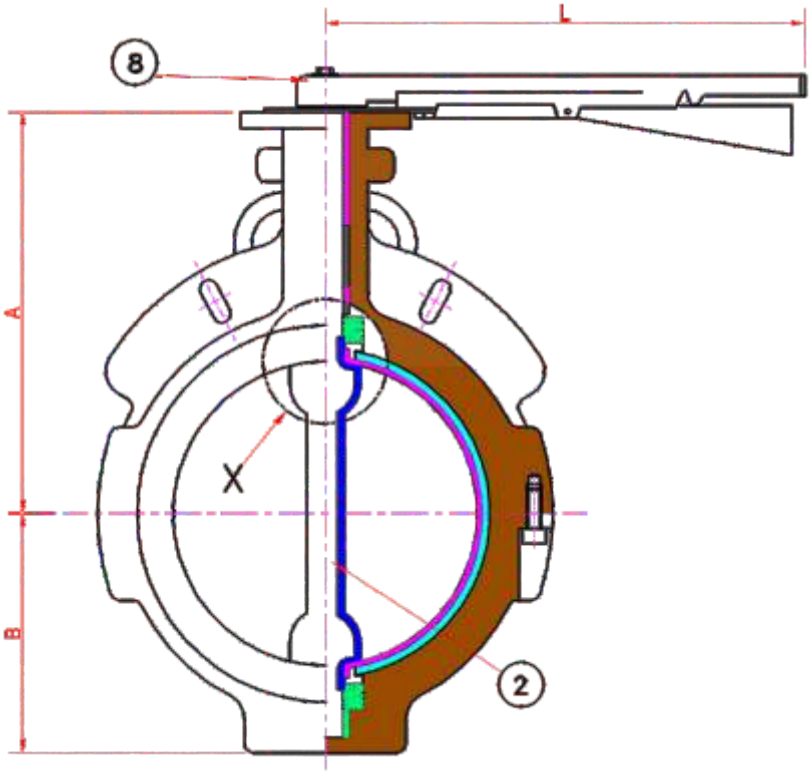

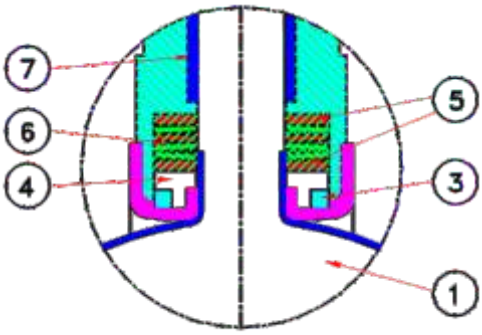

DETAIL–X

SR. NO.	DESCRIPTION	MATERIAL
01	BODY WITH LINER	CS / SS X PTFE/FEP/PFA
02	DISC WITH INTEGRAL SHAFT	AISI-304/316 FEP / PFA LINED
03	ELASTOMER BACKING	SILICON
04	THRUST COLLAR	PTFE
05	THRUST WASHER	S.S. AISI 304
06	CUP WASHER	SPRING STEEL NICKEL PLATED
07	GUIDE BUSH	S.S. AISI 304
08	LEVER ASSLY.	C.S

TECHNICAL DATA	
TESTING & INSPECTION	SPARK TESTED FOR 10 KV & HYDRO TESTED AT 10 KG/CM2 & PAINTED WITH 2 COATES OF RED OXIDE PRIMER
PRESSURE RATING	VACUUME TO 6 KG/CM2
TEMP. RATING	-29˚C TO 200˚C
STD. RESIN SPECS.	FEP : ASTMD-2116 / PFA : ASTM D 3307

WT. KG.	4.2	5.1	5.7	7.8	13.2	29.3	51.5	70.6	90.6
L	265	265	265	350	430	430	G.BOX	G.BOX	G.BOX
B	70	75	80	110	130	160	185	215	285
A	100	114	120	158	190	220	250	285	325
C ±1.6	43	46	46	52	56	60	68	78	78
SIZE	2”	2.1/2”	3”	4”	6”	8”	10”	12”	14”

PTFE LINED PIPES CLASS - 150#

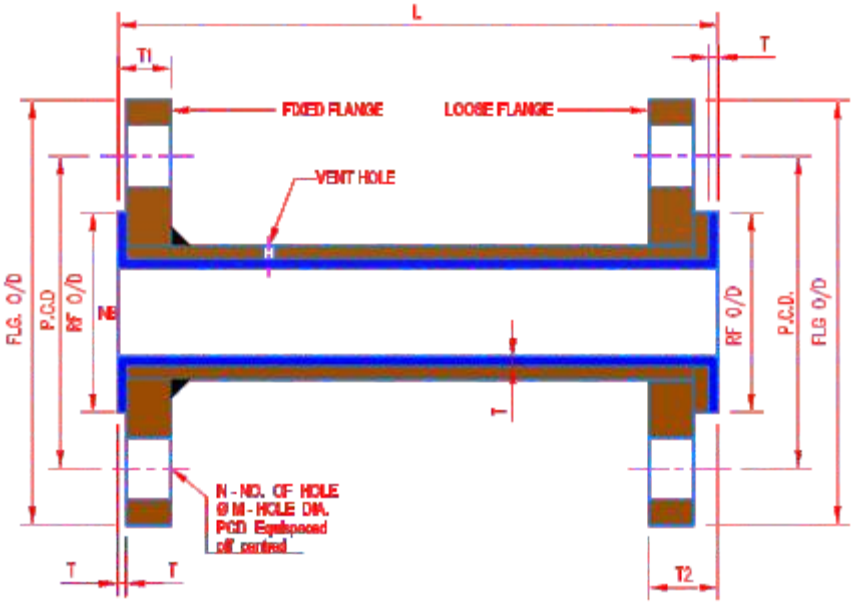

SR. NO.	DESCRIPTION	TECHNICAL DATA	QTY.
01	PIPE	ASTM A 106 GRADE B, ANSI B 36.10, SCH 40 UPTO 150 NB, SCH 30 UPTO 250 NB & SCH 20 FOR 300 NB.	1
02	FLANGES	MS PLATE FLANGES AS PER IS 2062, ASA 150# 1 FIX & 1 LOOSE	2
03	PTFE LINERS	PAST EXTRUDED / RAM EXTRUDED OR ISOSTATIC MOLDED WITH STANDARD PTFE RESIN AS PER ASTM D 1457 OR EQUIVALENT WHITE COLOR	1
04	TESTING & INSPECTION	SPARK TESTED FOR 10 KV & HYDRO TESTED AT 10 KG/CM2 & PAINTED WITH 2 COATES OF RED OXIDE PRIMER	
05	PRESSURE RATING	VACUUME TO 6 KG/CM2	
06	TEMP. RATING	-29˚C TO 260˚C	

CLASS 150

NB	L (mm)		FLG. O/D	RF O/D	P.C.D	App. T1	App. T2	N X M	LINER THK		WEIGHTS	
	MAX.	MIN.							Vacuum (T)	Non Vacuum (T)	Pipe (kg/m)	Pair of flgs (kg)
½”	6000	65	89	35.1	60.5	14.2	24.2	4 x 1/2”	3.0	3.0	1.2	1.5
3/4”	6000	75	98	42.9	69.9	15.7	27.7	4 x 1/2”	3.0	3.0	1.6	2.0
1”	6000	75	108	50.8	79.2	17.2	29.2	4 x 1/2”	4.0	3.0	2.5	2.5
1.1/4”	6000	80	118	63.5	88.9	18.7	30.2	4 x 1/2”	4.0	3.0	3.4	3.6
1.1/2”	6000	80	127	73.2	98.6	20.5	32.5	4 x 1/2”	4.0	3.0	4.5	4.2
2”	6000	90	152	91.9	120.7	22.1	37.1	4 x 5/8”	4.0	3.0	5.8	5.5
2.1/2”	6000	90	178	104.6	139.7	25.4	40.4	4 x 5/8”	4.0	3.0	7.1	7.2
3”	6000	100	191	127.0	152.4	27.9	42.9	4 x 5/8”	4.0	3.0	11.0	9.3
4”	6000	100	229	157.2	190.5	28.9	43.9	8 x 5/8”	4.5	3.0	16.0	13.6
5”	6000	100	254	185.7	215.9	28.9	43.9	8 x 3/4”	6.0	5.0	22.0	17.2
6”	6000	100	279	215.9	241.3	30.4	45.4	8 x 3/4”	6.0	5.0	28.0	21.8
8”	6000	120	343	269.7	298.5	33.4	48.4	8 x 3/4”	6.0	5.0	43.0	38.4
10”	6000	130	406	323.9	362.0	35.7	50.7	12 x 7/8”	7.5	5.0	60.0	47.2
12”	6000	130	483	381.0	431.8	37.8	52.8	12 x 7/8”	7.5	5.0	74.0	72.6

PTFE LINED ELBOWS 90° CLASS - 150#

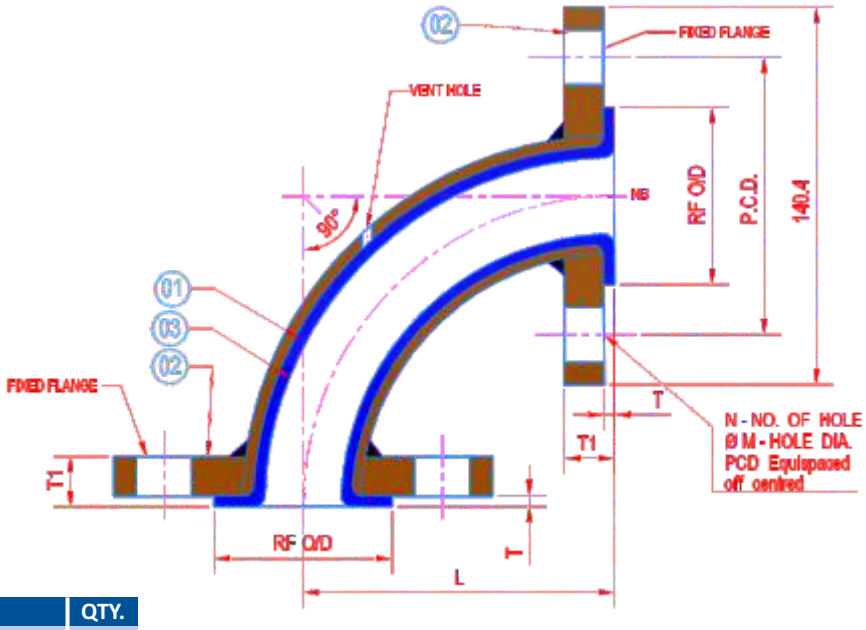

SR. NO.	DESCRIPTION	TECHNICAL DATA	QTY.
01	BEND PIPE	ASTM A 234 GRADE WPB, ANSI B 16.9, SCH 40 UPTO 150 NB, SCH 30 UPTO 250 NB & SCH 20 FOR 300 NB.	1
02	FLANGES	MS PLATE FLANGES AS PER IS 2062, ASA 150# 1 FIX & 1 LOOSE	2
03	PTFE LINERS	PAST EXTRUDED / RAM EXTRUDED OR ISOSTATIC MOLDED WITH STANDARD PTFE RESIN AS PER ASTM D 1457 OR EQUIVALENT WHITE COLOR	1
04	TESTING & INSPECTION	SPARK TESTED FOR 10 KV & HYDRO TESTED AT 10 KG/CM2 & PAINTED WITH 2 COATES OF RED OXIDE PRIMER	
05	PRESSURE RATING	VACUUME TO 6 KG/CM2	
06	TEMP. RATING	-29˚C TO 260˚C	

CLASS 150

NB	90°		FLG. O/D	RF O/D	P.C.D	App. T1	N X M	LINER THK		WEIGHTS
	L (mm)	Radius						Vacuum (T)	Non Vacuum (T)	Elbow 90° (kg/piece)
1/2”	----	----	89	35.1	60.5	14.2	4 x 1/2”	3.0	3.0	1.5
3/4”	----	----	98	42.9	69.9	15.7	4 x 1/2”	3.0	3.0	2.1
1”	89	LR	108	50.8	79.2	17.2	4 x 1/2”	4.0	3.0	2.7
1.1/4”	95	LR	118	63.5	88.9	18.7	4 x 1/2”	4.0	3.0	3.5
1.1/2”	102	LR	127	73.2	98.6	20.5	4 x 1/2”	4.0	3.0	4.0
2”	114	LR	152	91.9	120.7	22.1	4 x 5/8”	4.0	3.0	6.4
2.1/2”	127	LR	178	104.6	139.7	25.4	4 x 5/8”	4.0	3.0	8.0
3”	140	LR	191	127.0	152.4	27.9	4 x 5/8”	4.0	3.0	12.0
4”	165	LR	229	157.2	190.5	28.9	8 x 5/8”	4.5	3.0	19.0
5”	191	LR	254	185.7	215.9	28.9	8 x 3/4”	6.0	5.0	28.0
6”	203	SR	279	215.9	241.3	30.4	8 x 3/4”	6.0	5.0	36.0
8”	229	SR	343	269.7	298.5	33.4	8 x 3/4”	6.0	5.0	57.0
10”	419	LR	406	323.9	362.0	35.7	12 x 7/8”	7.5	5.0	82.0
12”	483	LR	483	381.0	431.8	37.8	12 x 7/8”	7.5	5.0	111.0

PTFE LINED ELBOWS 45° CLASS - 150#

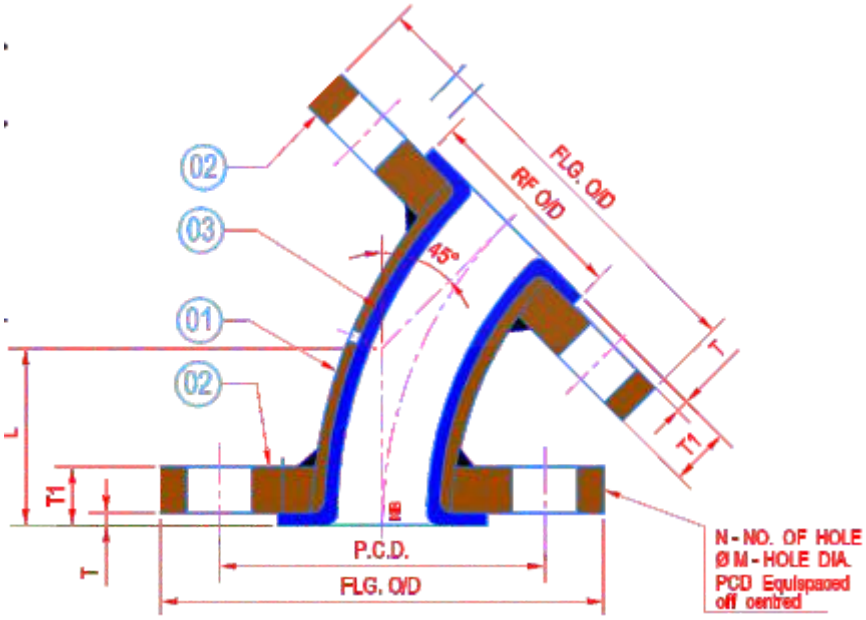

SR. NO.	DESCRIPTION	TECHNICAL DATA	QTY.
01	BEND PIPE	ASTM A 234 GRADE WPB, ANSI B 16.9, SCH 40 UPTO 150 NB, SCH 30 UPTO 250 NB & SCH 20 FOR 300 NB.	1
02	FLANGES	MS PLATE FLANGES AS PER Is2062, ASA 150# 1 FIX & 1 LOOSE	2
03	PTFE LINERS	PAST EXTRUDED / RAM EXTRUDED OR ISOSTATIC MOLDED WITH STANDARD PTFE RESIN AS PER ASTM D 1457 OR EQUIVALENT WHITE COLOR	1
04	TESTING & INSPECTION	SPARK TESTED FOR 10 KV & HYDRO TESTED AT 10 KG/CM2 & PAINTED WITH 2 COATES OF RED OXIDE PRIMER	
05	PRESSURE RATING	VACUUME TO 6 KG/CM2	
06	TEMP. RATING	-29˚C TO 260˚C	

CLASS 150

NB	45°		FLG. O/D	RF O/D	P.C.D	App. T1	N X M	LINER THK		WEIGHTS
	L (mm)	Radius						Vacuum (T)	Non Vacuum (T)	45° Elbow (kg/piece)
1/2”	----	----	89	35.1	60.5	14.2	4 x 1/2”	3.0	3.0	1.7
3/4”	----	----	98	42.9	69.9	15.7	4 x 1/2”	3.0	3.0	2.0
1”	45	LR	108	50.8	79.2	17.2	4 x 1/2”	4.0	3.0	3.0
1.1/4”	51	LR	118	63.5	88.9	18.7	4 x 1/2”	4.0	3.0	4.0
1.1/2”	57	LR	127	73.2	98.6	20.5	4 x 1/2”	4.0	3.0	6.0
2”	64	LR	152	91.9	120.7	22.1	4 x 5/8”	4.0	3.0	6.5
2.1/2”	76	LR	178	104.6	139.7	25.4	4 x 5/8”	4.0	3.0	7.0
3”	76	LR	191	127.0	152.4	27.9	4 x 5/8”	4.0	3.0	15.0
4”	102	LR	229	157.2	190.5	28.9	8 x 5/8”	4.5	3.0	20.0
5”	114	LR	254	185.7	215.9	28.9	8 x 3/4”	6.0	5.0	27.0
6”	127	SR	279	215.9	241.3	30.4	8 x 3/4”	6.0	5.0	33.0
8”	140	SR	343	269.7	298.5	33.4	8 x 3/4”	6.0	5.0	54.0
10”	165	LR	406	323.9	362.0	35.7	12 x 7/8”	7.5	5.0	75.0
12”	191	LR	483	381.0	431.8	37.8	12 x 7/8”	7.5	5.0	110.0

PTFE LINED EQ. TEE CLASS - 150#

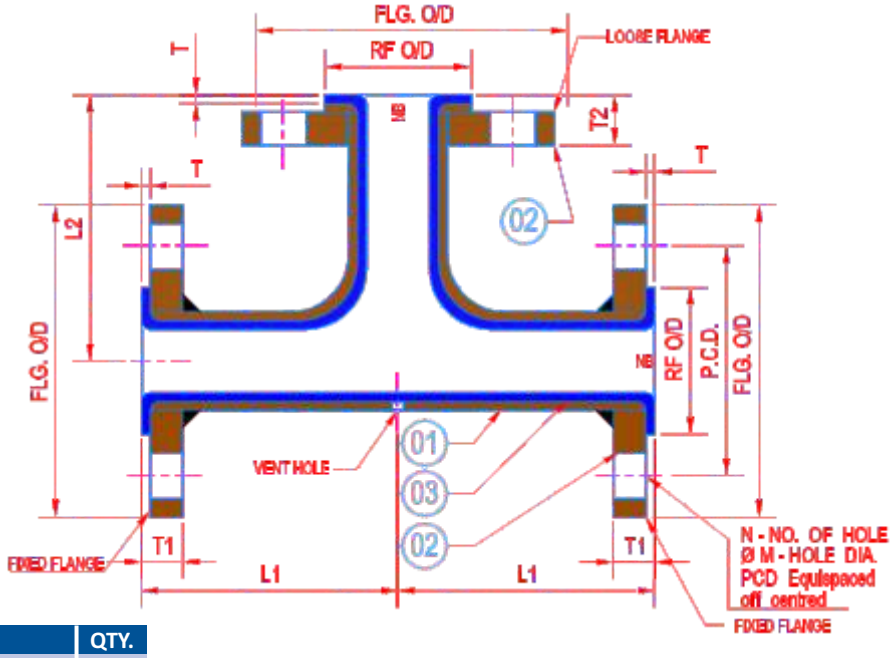

SR. NO.	DESCRIPTION	TECHNICAL DATA	QTY.
01	TEE PIPE	ASTM A 234 GRADE WPB, ANSI B 16.9, SCH 40 UPTO 150 NB, SCH 30 UPTO 250 NB & SCH 20 FOR 300 NB.	1
02	FLANGES	MS PLATE FLANGES AS PER IS2062, ASA 150# 2 FIX & 1 LOOSE	3
03	PTFE LINERS	ISOSTATIC MOLDED WITH STD. RESIN AS PER ASTM D 1457 WHITE, PFA LINED TO ASTM D 3307 / OR FEP LINED AT ASTM D 2116 OR EQUIVALENT	1
04	TESTING & INSPECTION	SPARK TESTED FOR 10 KV & HYDRO TESTED AT 10 KG/CM2 & PAINTED WITH 2 COATES OF RED OXIDE PRIMER	
05	PRESSURE RATING	VACUUME TO 6 KG/CM2	
06	TEMP. RATING	-29˚C TO 260˚C	

CLASS 150

NB	L1	L2	FLG. O/D	RF O/D	P.C.D	App. T1	App. T2	LINER THK		N X M	WEIGHTS kg / piece
								Vacuum (T)	Non Vacuum (T)		
1/2”	----	----	89	35.1	60.5	14.2	24.2	3.0	3.0	4 x 1/2”	2.5
3/4”	----	----	98	42.9	69.9	15.7	27.7	3.0	3.0	4 x 1/2”	3.2
1”	89	89	108	50.8	79.2	17.2	29.2	4.0	3.0	4 x 1/2”	5.5
1.1/4”	95	95	118	63.5	88.9	18.7	30.2	4.0	3.0	4 x 1/2”	6.0
1.1/2”	102	102	127	73.2	98.6	20.5	32.5	4.0	3.0	4 x 1/2”	9.5
2”	114	114	152	91.9	120.7	22.1	37.1	4.0	3.0	4 x 5/8”	11.5
2.1/2”	127	127	178	104.6	139.7	25.4	40.4	4.0	3.0	4 x 5/8”	13.0
3”	140	140	191	127.0	152.4	27.9	42.9	4.0	3.0	4 x 5/8”	19.5
4”	165	165	229	157.2	190.5	28.9	43.9	4.5	3.0	8 x 5/8”	24.0
5”	190	190	254	185.7	215.9	28.9	43.9	6.0	5.0	8 x 3/4”	29.0
6”	203	203	279	215.9	241.3	30.4	45.4	6.0	5.0	8 x 3/4”	45.0
8”	229	229	343	269.7	298.5	33.4	48.4	6.0	5.0	8 x 3/4”	68.0
10”	280	280	406	323.9	362.0	35.7	50.7	7.5	5.0	12 x 7/8”	100.0
12”	305	305	483	381.0	431.8	37.8	52.8	7.5	5.0	12 x 7/8”	150.0

PTFE LINED UN-EQ. TEE CLASS - 150#

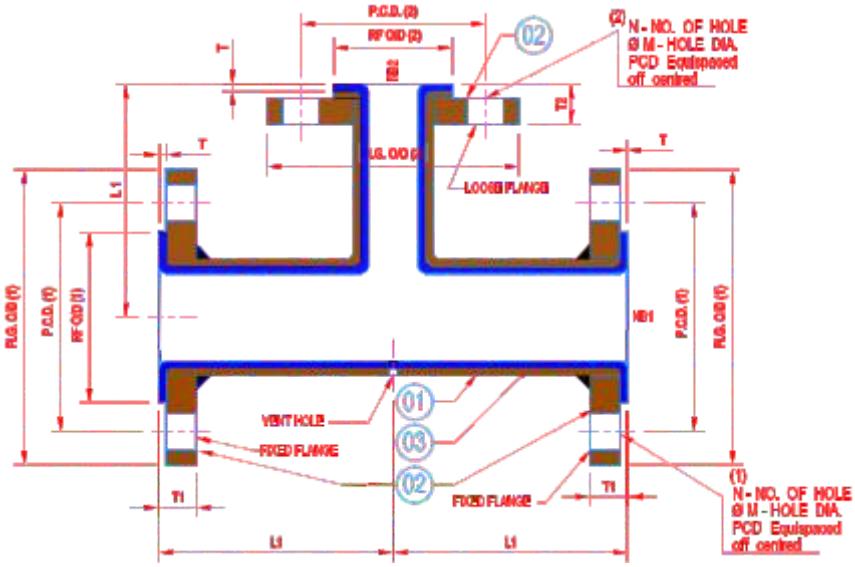

SR. NO.	DESCRIPTION	TECHNICAL DATA	QTY.
01	TEE PIPE	ASTM A 234 GRADE WPB, ANSI B 16.9, SCH 40 UPTO 150 NB, SCH 30 UPTO 250 NB & SCH 20 FOR 300 NB.	1
02	FLANGES	MS PLATE FLANGES AS PER IS2062, ASA 150# 2 FIX & 1 LOOSE	3
03	PTFE LINERS	ISOSTATIC MOLDED WITH STD. RESIN AS PER ASTM D 1457 WHITE, PFA LINED TO ASTM D 3307 / OR FEP LINED AT ASTM D 2116 OR EQUIVALENT	1
04	TESTING & INSPECTION	SPARK TESTED FOR 10 KV & HYDRO TESTED AT 10 KG/CM2 & PAINTED WITH 2 COATES OF RED OXIDE PRIMER	
05	PRESSURE RATING	VACUUME TO 6 KG/CM2	
06	TEMP. RATING	-29˚C TO 260˚C	

CLASS 150															
NB 1	NB 2	L1	FLG. O/D (1)	RF O/D (1)	P.C.D (1)	App. T1	FLG O/D (2)	RF O/D (2)	PCD (2)	App. T2	LINER THK		N X M		WT. kg / piece
											Vacuum (T)	Non Vacuum (T)	(1)	(2)	
3/4”	1/2”	----	98	42.9	69.9	15.7	89	35.1	60.5	24.2	3.0	3.0	4 X 1/2”	4 X 1/2”	2.8
1”	3/4”	89	108	50.8	79.2	17.2	98	42.9	69.9	27.7	4.0	3.0	4 X 1/2”	4 X 1/2”	3.9
1”	1/2”	89	108	50.8	79.2	17.2	89	35.1	60.5	24.2	4.0	3.0	4 X 1/2”	4 X 1/2”	3.7
1.1/4”	1”	95	118	63.5	88.9	18.7	108	50.8	79.2	29.2	4.0	3.0	4 X 1/2”	4 X 1/2”	5.0
1.1/4”	3/4”	95	118	63.5	88.9	18.7	98	42.9	69.9	27.7	4.0	3.0	4 X 1/2”	4 X 1/2”	4.6
1.1/4”	1/2”	95	118	63.5	88.9	18.7	89	35.1	60.5	24.2	4.0	3.0	4 X 1/2”	4 X 1/2”	4.2
1.1/2”	1.1/4”	102	127	73.2	98.6	20.5	118	63.5	88.9	30.2	4.0	3.0	4 X 1/2”	4 X 1/2”	8.7
1.1/2”	1”	102	127	73.2	98.6	20.5	108	50.8	79.2	29.2	4.0	3.0	4 X 1/2”	4 X 1/2”	8.0
1.1/2”	3/4”	102	127	73.2	98.6	20.5	98	42.9	69.9	27.7	4.0	3.0	4 X 1/2”	4 X 1/2”	5.5
2”	1.1/2”	114	152	91.9	120.7	22.1	127	73.2	98.6	32.5	4.0	3.0	4 X 5/8”	4 X 1/2”	10.5
2”	1.1/4”	114	152	91.9	120.7	22.1	118	63.5	88.9	30.2	4.0	3.0	4 X 5/8”	4 X 1/2”	9.7
2”	1”	114	152	91.9	120.7	22.1	108	50.8	79.2	29.2	4.0	3.0	4 X 5/8”	4 X 1/2”	8.9

PTFE LINED UN-EQ. TEE CLASS - 150#

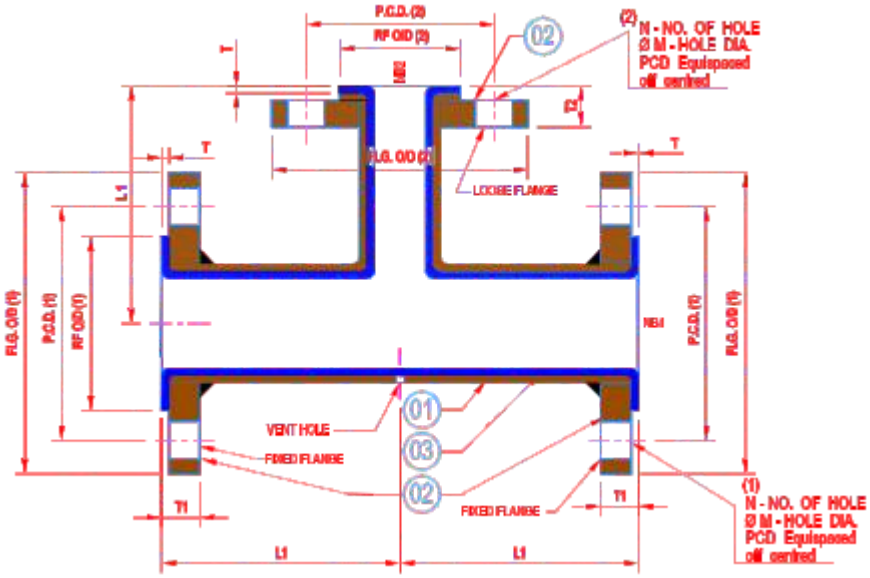

SR. NO.	DESCRIPTION	TECHNICAL DATA	QTY.
01	TEE PIPE	ASTM A 234 GRADE WPB, ANSI B 16.9, SCH 40 UPTO 150 NB, SCH 30 UPTO 250 NB & SCH 20 FOR 300 NB.	1
02	FLANGES	MS PLATE FLANGES AS PER IS2062, ASA 150# 2 FIX & 1 LOOSE	3
03	PTFE LINERS	ISOSTATIC MOLDED WITH STD. RESIN AS PER ASTM D 1457 WHITE, PFA LINED TO ASTM D 3307 / OR FEP LINED AT ASTM D 2116 OR EQUIVALENT	1
04	TESTING & INSPECTION	SPARK TESTED FOR 10 KV & HYDRO TESTED AT 10 KG/CM2 & PAINTED WITH 2 COATES OF RED OXIDE PRIMER	
05	PRESSURE RATING	VACUUME TO 6 KG/CM2	
06	TEMP. RATING	-29˚C TO 260˚C	

CLASS 150															
NB 1	NB 2	L1	FLG. O/D (1)	RF O/D (1)	P.C.D (1)	App. T1	FLG O/D (2)	RF O/D (2)	PCD (2)	App. T2	LINER THK		N X M		WT. kg / piece
											Vacuum (T)	Non Vacuum (T)	(1)	(2)	
2.1/2”	2”	127	178	104.6	139.7	25.4	152	91.9	120.7	37.1	4.0	3.0	4 X 5/8”	4 X 5/8”	11.0
2.1/2”	1.1/2”	127	178	104.6	139.7	25.4	127	73.2	98.6	32.5	4.0	3.0	4 X 5/8”	4 X 1/2”	10.0
2.1/2”	1.1/4”	127	178	104.6	139.7	25.4	118	63.5	88.9	30.2	4.0	3.0	4 X 5/8”	4 X 1/2”	9.5
2.1/2”	1”	127	178	104.6	139.7	25.4	108	50.8	79.2	29.2	4.0	3.0	4 X 5/8”	4 X 1/2”	8.9
3”	2.1/2”	140	191	127	152.4	27.9	178	104.6	139.7	40.4	4.0	3.0	4 X 5/8”	4 X 5/8”	18.3
3”	2”	140	191	127	152.4	27.9	152	91.9	120.7	37.1	4.0	3.0	4 X 5/8”	4 X 5/8”	17.5
3”	1.1/2”	140	191	127	152.4	27.9	127	73.2	98.6	32.5	4.0	3.0	4 X 5/8”	4 X 1/2”	17.0
3”	1”	140	191	127	152.4	27.9	108	50.8	79.2	29.2	4.0	3.0	4 X 5/8”	4 X 1/2”	16.0
4”	3”	165	229	157.2	190.5	28.9	191	127.0	152.4	42.9	4.5	3.0	8 X 5/8”	4 X 5/8”	23.1
4”	2.1/2”	165	229	157.2	190.5	28.9	178	104.6	139.7	40.4	4.5	3.0	8 X 5/8”	4 X 5/8”	22.4
4”	2”	165	229	157.2	190.5	28.9	152	91.9	120.7	37.1	4.5	3.0	8 X 5/8”	4 X 5/8”	22.0
4”	1”						108	50.8	79.2	29.2	4.5	3.0	8 X 5/8”	4 X 1/2”	19.0

PTFE LINED UN-EQ. TEE CLASS - 150#

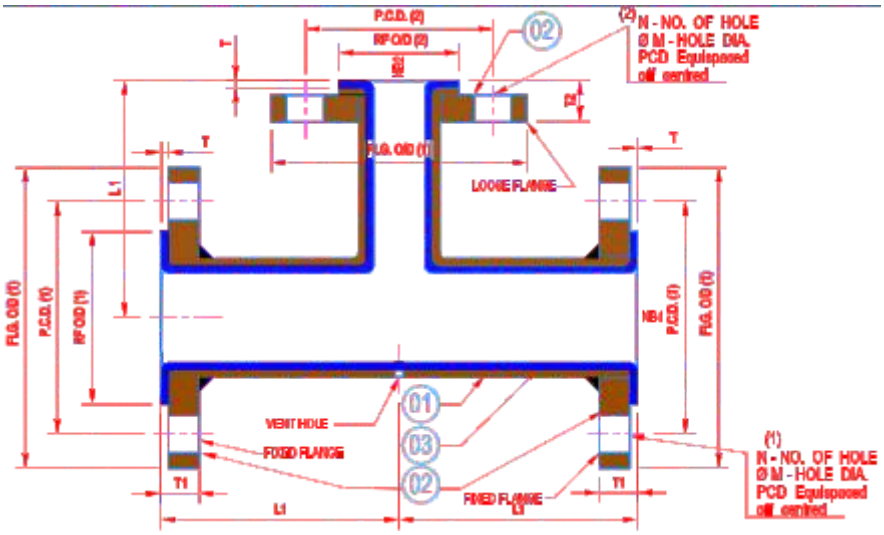

SR. NO.	DESCRIPTION	TECHNICAL DATA	QTY.
01	TEE PIPE	ASTM A 234 GRADE WPB, ANSI B 16.9, SCH 40 UPTO 150 NB, SCH 30 UPTO 250 NB & SCH 20 FOR 300 NB.	1
02	FLANGES	MS PLATE FLANGES AS PER IS2062, ASA 150# 2 FIX & 1 LOOSE	3
03	PTFE LINERS	ISOSTATIC MOLDED WITH STD. RESIN AS PER ASTM D 1457 WHITE, PFA LINED TO ASTM D 3307 / OR FEP LINED AT ASTM D 2116 OR EQUIVALENT	1
04	TESTING & INSPECTION	SPARK TESTED FOR 10 KV & HYDRO TESTED AT 10 KG/CM2 & PAINTED WITH 2 COATES OF RED OXIDE PRIMER	
05	PRESSURE RATING	VACUUME TO 6 KG/CM2	
06	TEMP. RATING	-29˚C TO 260˚C	

CLASS 150

NB 1	NB 2	L1	FLG. O/D (1)	RF O/D (1)	P.C.D (1)	App. T1	FLG O/D (2)	RF O/D (2)	PCD (2)	App. T2	LINER THK		N X M		WT. kg / piece
											Vacuum (T)	Non Vacuum (T)	(1)	(2)	
5”	4”	190	254	185.7	215.9	28.9	229	157.2	190.5	43.9	6.0	5.0	8 X 3/4”	8 X 5/8”	28.0
5”	3”	190	254	185.7	215.9	28.9	191	127.0	152.4	42.9	6.0	5.0	8 X 3/4”	4 X 5/8”	27.0
5”	2”	190	254	185.7	215.9	28.9	152	91.9	120.7	37.1	6.0	5.0	8 X 3/4”	4 X 5/8”	25.0
6”	5”	203	279	215.9	241.3	30.4	254	185.7	215.9	43.9	6.0	5.0	8 X 3/4”	8 X 3/4”	42.0
6”	4”	203	279	215.9	241.3	30.4	229	157.2	190.5	43.9	6.0	5.0	8 X 3/4”	8 X 5/8”	40.0
6”	3”	203	279	215.9	241.3	30.4	191	127.0	152.4	42.9	6.0	5.0	8 X 3/4”	4 X 5/8”	39.0
8”	6”	229	343	269.7	298.5	33.4	279	215.9	241.3	45.4	6.0	5.0	8 X 3/4”	8 X 3/4”	64.0
8”	5”	229	343	269.7	298.5	33.4	254	185.7	215.9	43.9	6.0	5.0	8 X 3/4”	8 X 3/4”	63.0
8”	4”	229	343	269.7	298.5	33.4	229	157.2	190.5	43.9	6.0	5.0	8 X 3/4”	8 X 5/8”	61.0
10”	8”	279	406	323.9	362.0	35.7	343	269.7	298.5	48.4	7.5	5.0	12 X 7/8”	8 X 3/4”	97.0
10”	6”	279	406	323.9	362.0	35.7	279	215.9	241.3	45.4	7.5	5.0	12 X 7/8”	8 X 3/4”	94.0
10”	5”	279	406	323.9	362.0	35.7	254	185.7	215.9	43.9	7.5	5.0	12 X 7/8”	8 X 3/4”	89.0
12”	10”	305	483	381.0	431.8	37.8	406	323.9	362.0	50.7	7.5	5.0	12 X 7/8”	2 X 7/8”	145.0
12”	8”	305	483	381.0	431.8	37.8	343	269.7	298.5	48.4	7.5	5.0	12 X 7/8”	8 X 3/4”	140.0
12”	6”	305	483	381.0	431.8	37.8	279	215.9	241.3	45.4	7.5	5.0	12 X 7/8”	8 X 3/4”	125.0

PTFE LINED CON. REDUCERS CLASS - 150#

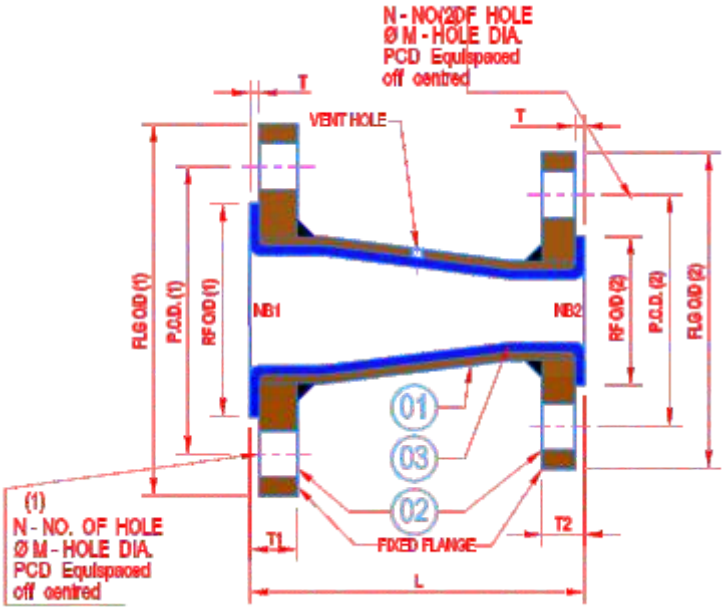

SR. NO.	DESCRIPTION	TECHNICAL DATA	QTY.
01	CONCENTRICE REDUCERS	ASTM A 234 GRADE WPB, ANSI B 16.9, SCH 40 UPTO 150 NB, SCH 30 UPTO 250 NB & SCH 20 FOR 300 NB.	1
02	FLANGES	MS PLATE FLANGES AS PER IS2062, ASA 150# BOTH FIX	2
03	PTFE LINERS / LINING	ISOSTATIC MOLDED WITH STD. RESIN AS PER ASTM D 1457 WHITE, PFA LINED TO ASTM D 3307 / OR FEP LINED AT ASTM D 2116 OR EQUIVALENT	1
04	TESTING & INSPECTION	SPARK TESTED FOR 10 KV & HYDRO TESTED AT 10 KG/CM2 & PAINTED WITH 2 COATES OF RED OXIDE PRIMER	
05	PRESSURE RATING	VACUUME TO 6 KG/CM2	
06	TEMP. RATING	-29˚C TO 260˚C	

CLASS 150

NB 1	NB 2	L	FLG. O/D (1)	RF O/D (1)	P.C.D (1)	App. T1	FLG O/D (2)	RF O/D (2)	PCD (2)	App. T2	LINER THK		N X M		WT. kg / piece
											Vacuum (T)	Non Vacuum (T)	(1)	(2)	
1.1/2”	1”	114	127	73	98.4	20.5	108	51	79.4	17.2	4.0	3.0	4 X 1/2”	4 X 1/2”	3.3
2”	1”	127	152	92	120.7	22.1	108	51	79.4	17.2	4.0	3.0	4 X 5/8”	4 X 1/2”	4.1
2”	1.1/2”	127	152	92	120.7	22.1	127	73	98.4	20.5	4.0	3.0	4 X 5/8”	4 X 1/2”	5.0
3”	1”	152	191	127	152.4	27.9	108	51	79.4	17.1	4.0	3.0	4 X 5/8”	4 X 1/2”	6.2
3”	1.1/2”	152	191	127	152.4	27.9	127	73	98.4	20.5	4.0	3.0	4 X 5/8”	4 X 1/2”	6.9
3”	2”	152	191	127	152.4	27.9	152	92	120.7	22.1	4.0	3.0	4 X 5/8”	4 X 5/8”	7.6
4”	2”	178	229	157	190.5	28.9	152	92	120.7	22.1	4.5	3.0	8 X 5/8”	4 X 5/8”	9.9
4”	3”	178	229	157	190.5	28.9	191	127	152.4	27.9	4.5	3.0	8 X 5/8”	4 X 5/8”	11.0
6”	3”	229	279	216	241.3	30.4	191	127	152.4	27.9	6.0	5.0	8 X 3/4”	4 X 5/8”	17.0
6”	4”	229	279	216	241.3	30.4	229	157	190.5	28.9	6.0	5.0	8 X 3/4”	8 X 5/8”	18.0
8”	4”	279	343	270	298.5	33.4	229	157	190.5	28.9	6.0	5.0	8 X 3/4”	8 X 5/8”	22.0
8”	6”	279	343	270	298.5	33.4	279	216	241.3	30.4	6.0	5.0	8 X 3/4”	8 X 3/4”	26.0
10”	6”	305	406	324	362.0	35.7	279	216	241.3	30.4	7.5	5.0	12 X 7/8”	8 X 3/4”	35.0
10”	8”	305	406	324	362.0	35.7	343	270	298.5	33.4	7.5	5.0	12 X 7/8”	8 X 3/4”	40.0
12”	8”	356	483	381	431.8	37.8	343	270	298.5	33.4	7.5	5.0	12 X 7/8”	8 X 3/4”	48.0
12”	10”	356	483	381	431.8	37.8	406	324	431.8	35.7	7.5	5.0	12 X 7/8”	12 X 7/8”	53.0

PTFE LINED ECCE. REDUCERS CLASS - 150#

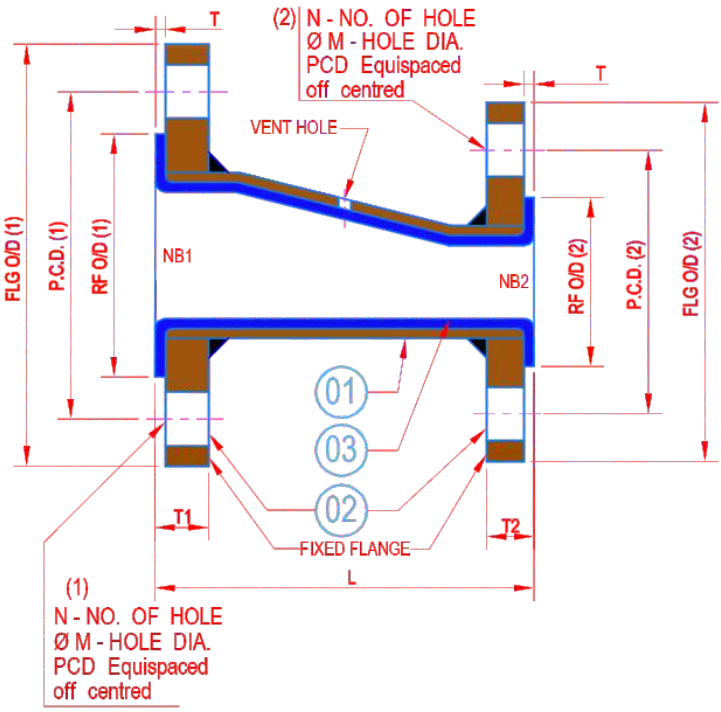

SR. NO.	DESCRIPTION	TECHNICAL DATA	QTY.
01	ECCENTRIC REDUCERS	ASTM A 234 GRADE WPB, ANSI B 16.9, SCH 40 UPTO 150 NB, SCH 30 UPTO 250 NB & SCH 20 FOR 300 NB.	1
02	FLANGES	MS PLATE FLANGES AS PER IS2062, ASA 150# BOTH FIX	2
03	PTFE LINERS / LINING	ISOSTATIC MOLDED WITH STD. RESIN AS PER ASTM D 1457 WHITE, PFA LINED TO ASTM D 3307 / OR FEP LINED TO ASTM D 2116 OR EQUIVALENT	1
04	TESTING & INSPECTION	SPARK TESTED FOR 10 KV & HYDRO TESTED AT 10 KG/CM2 & PAINTED WITH 2 COATES OF RED OXIDE PRIMER	
05	PRESSURE RATING	VACUUME TO 6 KG/CM2	
06	TEMP. RATING	-29˚C TO 260˚C	

CLASS 150

NB 1	NB 2	L	FLG. O/D (1)	RF O/D (1)	P.C.D (1)	App. T1	FLG O/D (2)	RF O/D (2)	PCD (2)	App. T2	LINER THK		N X M		WT. kg / piece
											Vacuum (T)	Non Vacuum (T)	(1)	(2)	
1.1/2”	1”	114	127	73	98.4	20.5	108	51	79.4	17.2	4.0	3.0	4 X 1/2”	4 X 1/2”	3.3
2”	1”	127	152	92	120.7	22.1	108	51	79.4	17.2	4.0	3.0	4 X 5/8”	4 X 1/2”	4.1
2”	1.1/2”	127	152	92	120.7	22.1	127	73	98.4	20.5	4.0	3.0	4 X 5/8”	4 X 1/2”	5.0
3”	1”	152	191	127	152.4	27.9	108	51	79.4	17.1	4.0	3.0	4 X 5/8”	4 X 1/2”	6.2
3”	1.1/2”	152	191	127	152.4	27.9	127	73	98.4	20.5	4.0	3.0	4 X 5/8”	4 X 1/2”	6.9
3”	2”	152	191	127	152.4	27.9	152	92	120.7	22.1	4.0	3.0	4 X 5/8”	4 X 5/8”	7.6
4”	2”	178	229	157	190.5	28.9	152	92	120.7	22.1	4.5	3.0	8 X 5/8”	4 X 5/8”	9.9
4”	3”	178	229	157	190.5	28.9	191	127	152.4	27.9	4.5	3.0	8 X 5/8”	4 X 5/8”	11.0
6”	3”	229	279	216	241.3	30.4	191	127	152.4	27.9	6.0	5.0	8 X 3/4”	4 X 5/8”	17.0
6”	4”	229	279	216	241.3	30.4	229	157	190.5	28.9	6.0	5.0	8 X 3/4”	8 X 5/8”	18.0
8”	4”	279	343	270	298.5	33.4	229	157	190.5	28.9	6.0	5.0	8 X 3/4”	8 X 5/8”	22.0
8”	6”	279	343	270	298.5	33.4	279	216	241.3	30.4	6.0	5.0	8 X 3/4”	8 X 3/4”	26.0
10”	6”	305	406	324	362.0	35.7	279	216	241.3	30.4	7.5	5.0	12 X 7/8”	8 X 3/4”	35.0
10”	8”	305	406	324	362.0	35.7	343	270	298.5	33.4	7.5	5.0	12 X 7/8”	8 X 3/4”	40.0
12”	8”	356	483	381	431.8	37.8	343	270	298.5	33.4	7.5	5.0	12 X 7/8”	8 X 3/4”	48.0
12”	10”	356	483	381	431.8	37.8	406	324	431.8	35.7	7.5	5.0	12 X 7/8”	12 X 7/8”	53.0

PTFE LINED CROSS CLASS - 150#

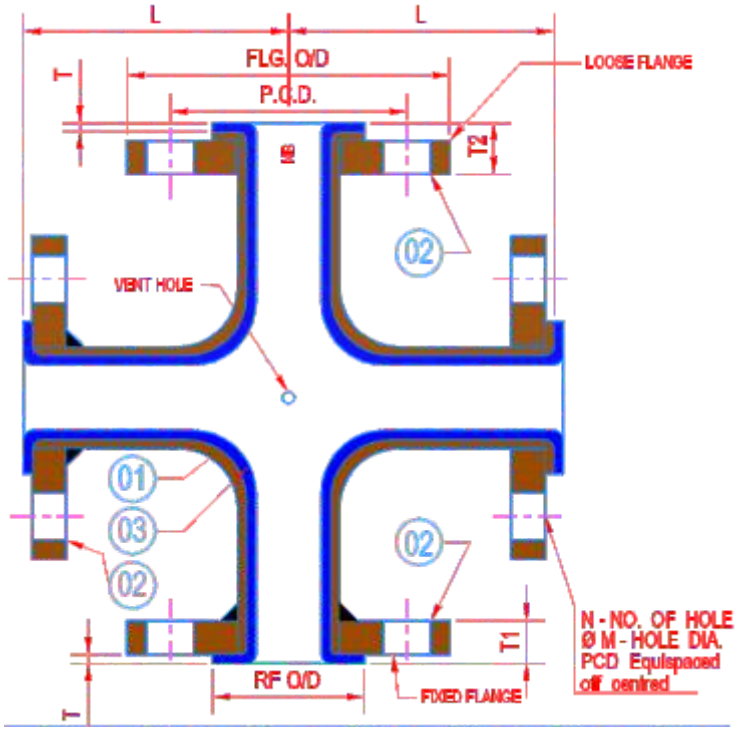

SR. NO.	DESCRIPTION	TECHNICAL DATA	QTY.
01	CROSS PIPE	FABRICATED FROM ASTM A 106 GRADE B, ANSI B 36.1, SCH 40 UPTO 150 NB, SCH 30 UPTO 250 NB & SCH 20 FOR 300 NB.	1
02	FLANGES	MS PLATE FLANGES AS PER IS2062, ASA 150# 2 FIX & 2 LOOSE	4
03	PTFE LINERS	ISOSTATIC MOLDED WITH STD. RESIN AS PER ASTM D 1457 WHITE, PFA LINED TO ASTM D 3307 / OR FEP LINED AT ASTM D 2116 OR EQUIVALENT	1
04	TESTING & INSPECTION	SPARK TESTED FOR 10 KV & HYDRO TESTED AT 10 KG/CM2 & PAINTED WITH 2 COATES OF RED OXIDE PRIMER	
05	PRESSURE RATING	VACUUME TO 6 KG/CM2	
06	TEMP. RATING	-29˚C TO 260˚C	

CLASS 150										
NB	L	FLG. O/D	RF O/D	P.C.D.	App. T1	App. T2	LINER THK		N X M	WEIGHTS kg / piece
							Vacuum (T)	Non Vacuum (T)		
1/2”	----	89	35.1	60.5	14.2	24.2	3.0	3.0	4 x 1/2”	4.0
3/4”	----	98	42.9	69.9	15.7	27.7	3.0	3.0	4 x 1/2”	3.5
1”	89	108	50.8	79.2	17.2	29.2	4.0	3.0	4 x 1/2”	5.5
1.1/4”	95	118	63.5	88.9	18.7	30.2	4.0	3.0	4 x 1/2”	7.7
1.1/2”	102	127	73.2	98.6	20.5	32.5	4.0	3.0	4 x 1/2”	8.7
2”	114	152	91.9	120.7	22.1	37.1	4.0	3.0	4 x 5/8”	14.0
2.1/2”	127	178	104.6	139.7	25.4	40.4	4.0	3.0	4 x 5/8”	20.6
3”	140	191	127.0	152.4	27.9	42.9	4.0	3.0	4 x 5/8”	24.8
4”	165	229	157.2	190.5	28.9	43.9	4.5	3.0	8 x 5/8”	39.1
5”	190	254	185.7	215.9	28.9	43.9	6.0	5.0	8 x 3/4”	68.8
6”	203	279	215.9	241.3	30.4	45.4	6.0	5.0	8 x 3/4”	79.5
8”	229	343	269.7	298.5	33.4	48.4	6.0	5.0	8 x 3/4”	99.0
10”	280	406	323.9	362.0	35.7	50.7	7.5	5.0	12 x 7/8”	160.0
12”	305	483	381.0	431.8	37.8	52.8	7.5	5.0	12 x 7/8”	280.0

PTFE LINED REDUCING FLG. CLASS - 150#

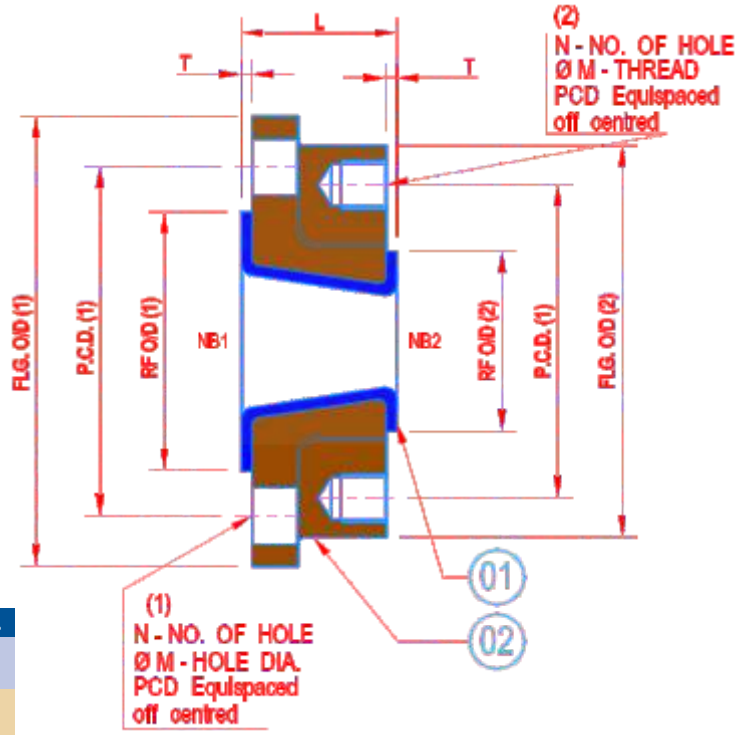

SR. NO.	DESCRIPTION	TECHNICAL DATA	QTY.
01	REDUCING FLANGE	CS A 216 WCB / MS PLATE IS 2062, ANSI B 16.5 ASA 150#	1
02	PTFE LINERS / LINING	ISOSTATIC MOLDED WITH STD. RESIN AS PER ASTM D 1457 WHITE, PFA LINED TO ASTM D 3307 / OR FEP LINED TO ASTM D 2116 OR EQUIVALENT	1
03	TESTING & INSPECTION	SPARK TESTED FOR 10 KV & HYDRO TESTED AT 10 KG/CM2 & PAINTED WITH 2 COATES OF RED OXIDE PRIMER	
04	PRESSURE RATING	VACUUME TO 6 KG/CM2	
05	TEMP. RATING	-29˚C TO 260˚C	

CLASS 150													
NB 1	NB 2	L	FLG. O/D (1)	RF O/D (1)	P.C.D (1)	FLG O/D (2)	RF O/D (2)	PCD (2)	LINER THK		N X M - THREAD		WT. kg / piece
									Vacuum (T)	Non Vacuum (T)	(1)	(2)	
1.1/2”	1”	44	127	73	98.4	108	51	79.4	4.0	3.0	4 X 1/2”	4 X 1/2”	4.4
2”	1”	44	152	92	120.7	108	51	79.4	4.0	3.0	4 X 5/8”	4 X 1/2”	5.6
2”	1.1/2”	44	152	92	120.7	127	73	98.4	4.0	3.0	4 X 5/8”	4 X 1/2”	4.9
2.1/2”	1”	44	178	105	139.7	108	51	79.4	4.0	3.0	4 X 5/8”	4 X 1/2”	6.3
2.1/2”	1.1/2”	44	178	105	139.7	127	73	98.4	4.0	3.0	4 X 5/8”	4 X 1/2”	5.3
2.1/2”	2”	44	178	105	139.7	152	92	120.7	4.0	3.0	4 X 5/8”	4 X 5/8”	4.8
3”	1”	44	191	127	152.4	108	51	79.4	4.0	3.0	4 X 5/8”	4 X 1/2”	6.9
3”	1.1/2”	44	191	127	152.4	127	73	98.4	4.0	3.0	4 X 5/8”	4 X 1/2”	6.3
3”	2”	44	191	127	152.4	152	92	120.7	4.0	3.0	4 X 5/8”	4 X 5/8”	5.9
3”	2.1/2”	44	191	127	152.4	178	105	139.7	4.0	3.0	4 X 5/8”	4 X 5/8”	5.5
4”	1”	51	229	157	190.5	108	51	79.4	4.5	3.0	8 X 5/8”	4 X 1/2”	11.9
4”	1.1/2”	51	229	157	190.5	127	73	98.4	4.5	3.0	8 X 5/8”	4 X 1/2”	11.1
4”	2”	51	229	157	190.5	152	92	120.7	4.5	3.0	8 X 5/8”	4 X 5/8”	10.9
4”	2.1/2”	51	229	157	190.5	178	105	139.7	4.5	3.0	8 X 5/8”	4 X 5/8”	10.4
4”	3”	51	229	157	190.5	191	127	152.4	4.5	3.0	8 X 5/8”	4 X 5/8”	9.8

PTFE LINED REDUCING FLG. CLASS - 150#

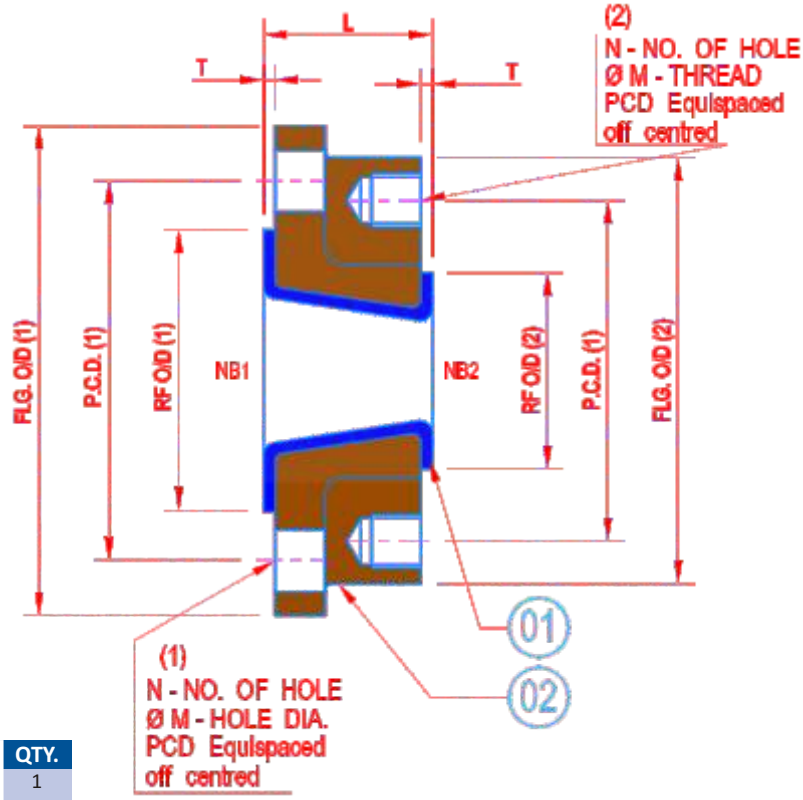

SR. NO.	DESCRIPTION	TECHNICAL DATA	QTY.
01	REDUCING FLANGE	CS A 216 WCB / MS PLATE IS 2062, ANSI B 16.5 ASA 150#	1
02	PTFE LINERS / LINING	ISOSTATIC MOLDED WITH STD. RESIN AS PER ASTM D 1457 WHITE, PFA LINED TO ASTM D 3307 / OR FEP LINED TO ASTM D 2116 OR EQUIVALENT	1
03	TESTING & INSPECTION	SPARK TESTED FOR 10 KV & HYDRO TESTED AT 10 KG/CM2 & PAINTED WITH 2 COATES OF RED OXIDE PRIMER	
04	PRESSURE RATING	VACUUME TO 6 KG/CM2	
05	TEMP. RATING	-29˚C TO 260˚C	

CLASS 150													
NB 1	NB 2	L	FLG. O/D (1)	RF O/D (1)	P.C.D (1)	FLG O/D (2)	RF O/D (2)	PCD (2)	LINER THK		N X M - THREAD		WT. kg / piece
									Vacuum (T)	Non Vacuum (T)	(1)	(2)	
6”	1”	51	279	215.9	241.3	108	51	79.4	6.0	5.0	8 X 3/4”	4 X 1/2”	19.5
6”	1.1/2”	51	279	215.9	241.3	127	73	98.4	6.0	5.0	8 X 3/4”	4 X 1/2”	18.0
6”	2”	51	279	215.9	241.3	152	92	120.7	6.0	5.0	8 X 3/4”	4 X 5/8”	17.3
6”	3”	51	279	215.9	241.3	191	127	152.4	6.0	5.0	8 X 3/4”	4 X 5/8”	16.0
6”	4”	51	279	215.9	241.3	229	157	190.5	6.0	5.0	8 X 3/4”	8 X 5/8”	15.0
8”	1”	51	343	269.7	298.5	108	51	79.4	6.0	5.0	8 X 3/4”	4 X 1/2”	24.2
8”	1.1/2”	51	343	269.7	298.5	127	73	98.4	6.0	5.0	8 X 3/4”	4 X 1/2”	23.0
8”	2”	51	343	269.7	298.5	152	92	120.7	6.0	5.0	8 X 3/4”	4 X 5/8”	26.0
8”	3”	51	343	269.7	298.5	191	127	152.4	6.0	5.0	8 X 3/4”	4 X 5/8”	24.9
8”	4”	51	343	269.7	298.5	229	157	190.5	6.0	5.0	8 X 3/4”	8 X 5/8”	23.0
8”	6”	51	343	269.7	298.5	279	215.9	241.3	6.0	5.0	8 X 3/4”	8 X 3/4”	20.8

PTFE LINED REDUCING FLG. CLASS - 150#

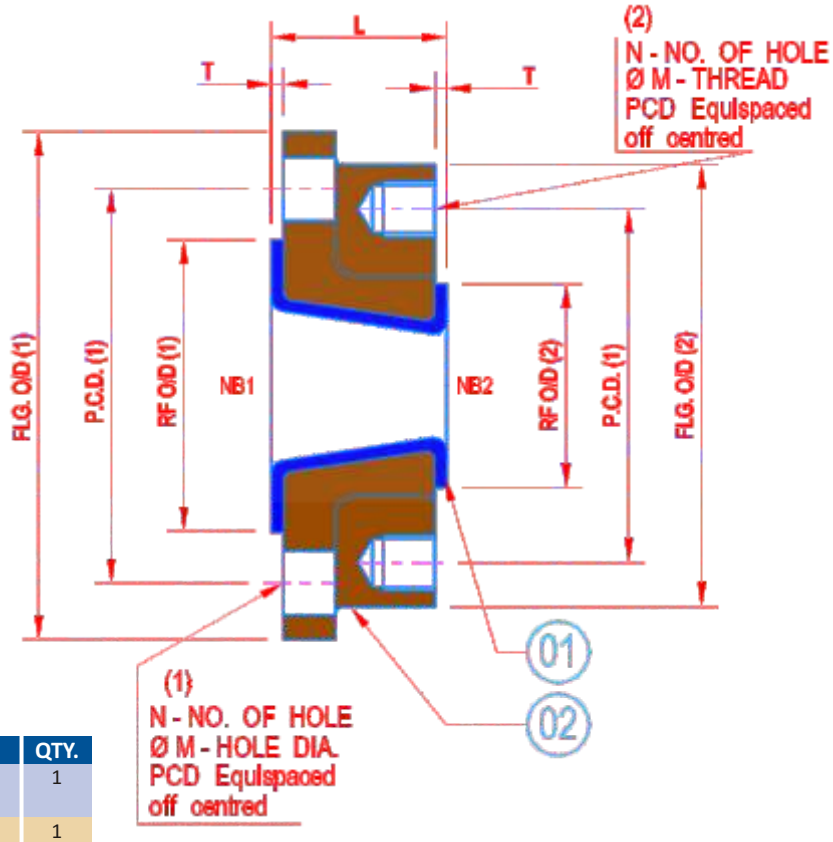

SR. NO.	DESCRIPTION	TECHNICAL DATA	QTY.
01	REDUCING FLANGE	CS A 216 WCB / MS PLATE IS 2062, ANSI B 16.5 ASA 150#	1
02	PTFE LINERS / LINING	ISOSTATIC MOLDED WITH STD. RESIN AS PER ASTM D 1457 WHITE, PFA LINED TO ASTM D 3307 / OR FEP LINED TO ASTM D 2116 OR EQUIVALENT	1
03	TESTING & INSPECTION	SPARK TESTED FOR 10 KV & HYDRO TESTED AT 10 KG/CM2 & PAINTED WITH 2 COATES OF RED OXIDE PRIMER	
04	PRESSURE RATING	VACUUME TO 6 KG/CM2	
05	TEMP. RATING	-29˚C TO 260˚C	

CLASS 150													
NB 1	NB 2	L	FLG. O/D (1)	RF O/D (1)	P.C.D (1)	FLG O/D (2)	RF O/D (2)	PCD (2)	LINER THK		N X M - THREAD		WT. kg / piece
									Vacuum (T)	Non Vacuum (T)	(1)	(2)	
10”	1”	51	406	323.9	361.9	108	51	79.4	6.0	5.0	8 X 3/4”	4 X 1/2”	30.4
10”	1.1/2”	51	406	323.9	361.9	127	73	98.4	6.0	5.0	8 X 3/4”	4 X 1/2”	29.0
10”	2”	51	406	323.9	361.9	152	92	120.7	6.0	5.0	8 X 3/4”	4 X 5/8”	27.4
10”	3”	51	406	323.9	361.9	191	127	152.4	6.0	5.0	8 X 3/4”	4 X 5/8”	35.0
10”	4”	51	406	323.9	361.9	229	157	190.4	6.0	5.0	8 X 3/4”	8 X 5/8”	34.0
10”	6”	51	406	323.9	361.9	279	215.9	241.3	7.5	5.0	8 X 3/4”	8 X 3/4”	30.0
10”	8”	51	406	323.9	361.9	343	269.7	298.5	7.5	5.0	8 X 3/4”	8 X 3/4”	28.0
12”	2”	51	483	381.0	431.8	152	92	120.7	6.0	5.0	12 X 7/8”	4 X 5/8”	34.6
12”	4”	51	483	381.0	431.8	229	157	190.5	6.0	5.0	12 X 7/8”	8 X 5/8”	55.0
12”	6”	51	483	381.0	431.8	279	215.9	241.3	7.5	5.0	12 X 7/8”	8 X 3/4”	50.0
12”	8”	51	483	381.0	431.8	343	269.7	298.5	7.5	5.0	12 X 7/8”	8 X 3/4”	45.0
12”	10”	51	483	381.0	431.8	406	323.9	361.9	7.5	5.0	12 X 7/8”	8 X 3/4”	40.0

PTFE LINED INSTRUMENT TEE ONE SIDE FLANGE END 150

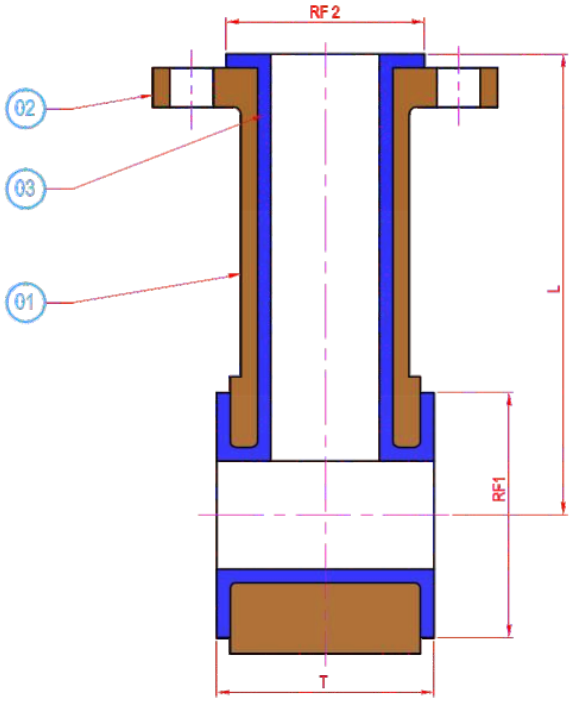

SR. NO.	PARTY NAME	MATERIAL	QTY.
01	BODY	CS A 216 WCB / MS PLATE IS 2062	1
02	FLANGE	CS A 216 WCB / MS PLATE IS 2062 ANSI B 16.5 ASA 150#	1
03	PTFE LINERS / LINING	ISOSTATIC MOLDED WITH STD. RESIN AS PER ASTM D 1457 WHITE, PFA LINED TO ASTM D 3307 / OR FEP LINED TO ASTM D 2116 OR EQUIVALENT	1

TECHNICAL DATA	
TESTING & INSPECTION	SPARK TESTED FOR 10 KV & HYDRO TESTED AT 10 KG/CM2 & PAINTED WITH 2 COATES OF RED OXIDE PRIMER
PRESSURE RATING	VACUUME TO 6 KG/CM2
TEMP. RATING	-29˚C TO 200˚C

SIZE	RF1	RF2	L	T
1” x 1”	48	48	89	60
1 1/2” x 1”	69	48	102	60
2” x 1”	88	48	115	60
2” x 1 1/2”	88	69	115	70
2” x 2”	88	88	115	80
3” x 1”	118	48	140	60
3” x 1 1/2”	118	69	140	70
3” x 2”	118	88	140	80
4” x 1”	151	48	165	60
4” x 1 1/2”	151	69	165	70
4” x 2”	151	88	165	80
6” x 1”	204	48	203	60
6” x 1 1/2”	204	69	203	70
6” x 2”	204	88	203	80
8” x 1”	256	48	229	60
8” x 1 1/2”	256	69	229	70
8” x 2”	256	88	229	80

PTFE LINED SPARGER FLANGE END 150

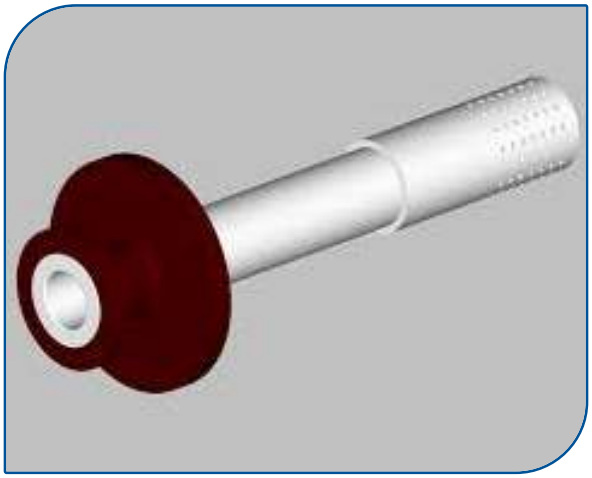

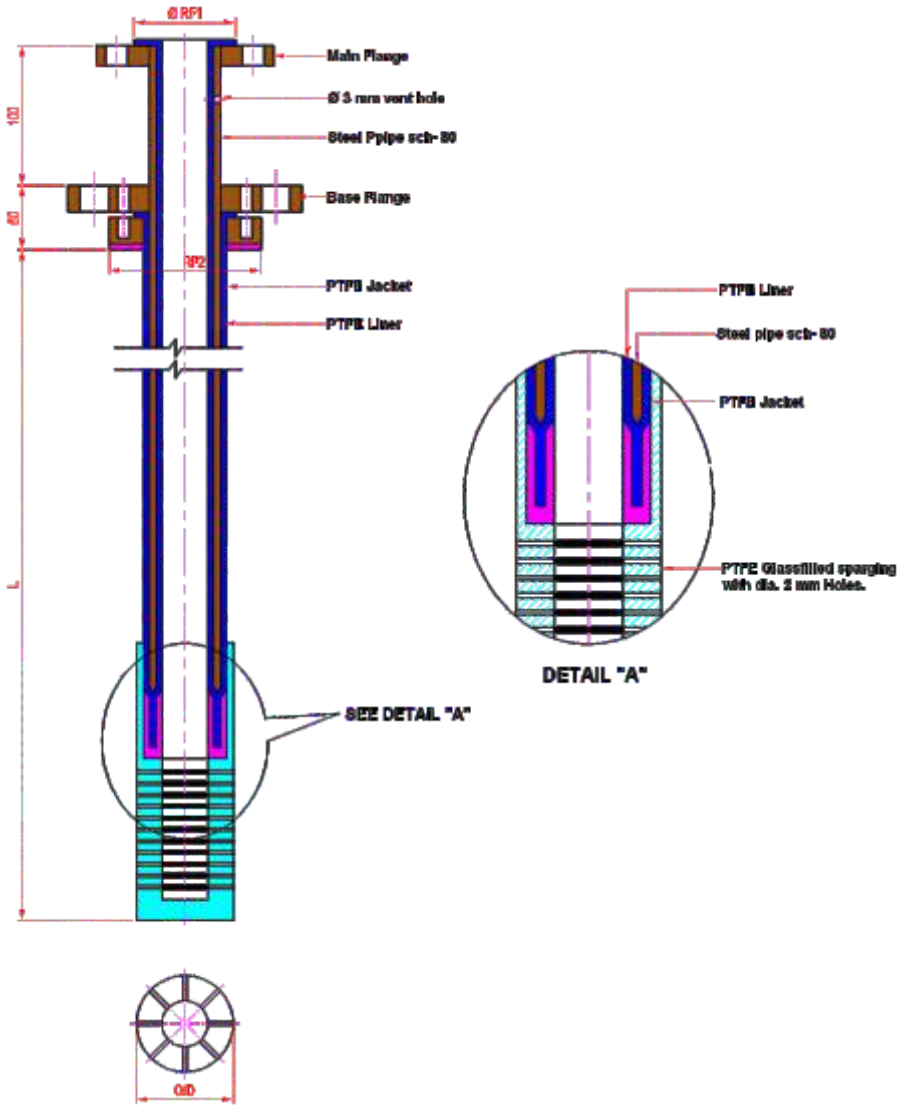

TECHNICAL DATA	
TESTING & INSPECTION	SPARK TESTED FOR 10 KV & HYDRO TESTED AT 10 KG/CM2 & PAINTED WITH 2 COATES OF RED OXIDE PRIMER
PRESSURE RATING	VACUUME TO 6 KG/CM2
TEMP. RATING	-29˚C TO 200˚C

SIZE	RF 1	RF 2	PIPE	MAIN FLANGE	BASE FLANGE	L	O/D
1”	48	105	25	25 NB	65 NB	3000	55
1 1/2”	69	118	40	40 NB	80 NB	3000	68
2”	88	151	50	50 NB	100 NB	3000	80
3”	118	204	80	80 NB	150 NB	3000	109

PTFE LINED DIP PIPE FLANGE END 150

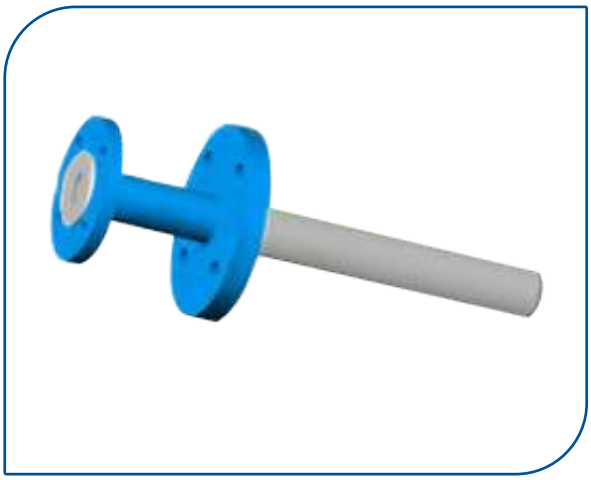

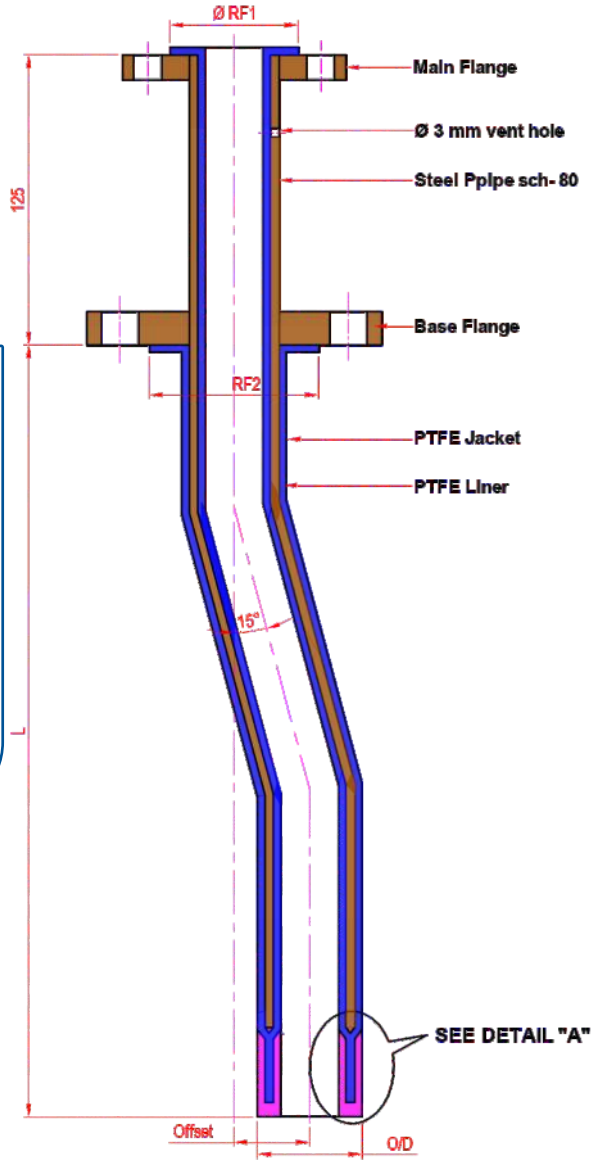

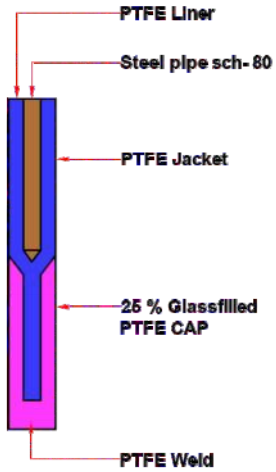

DETAIL "A"

TECHNICAL DATA	
TESTING & INSPECTION	SPARK TESTED FOR 10 KV & HYDRO TESTED AT 10 KG/CM2 & PAINTED WITH 2 COATES OF RED OXIDE PRIMER
PRESSURE RATING	VACUUME TO 6 KG/CM2
TEMP. RATING	-29˚C TO 200˚C

SIZE	RF 1	RF 2	PIPE	MAIN FLANGE	BASE FLANGE	L	O/D	MAX PFFSET
1”	48	88	25	25 NB	50 NB	3000	45	150
1 1/2”	69	105	40	40 NB	65 NB	3000	58	200
2”	88	118	50	50 NB	80 NB	3000	70	250
3”	118	151	80	80 NB	100 NB	3000	99	300

PTFE LINED DIP PIPE FLANGE END 150

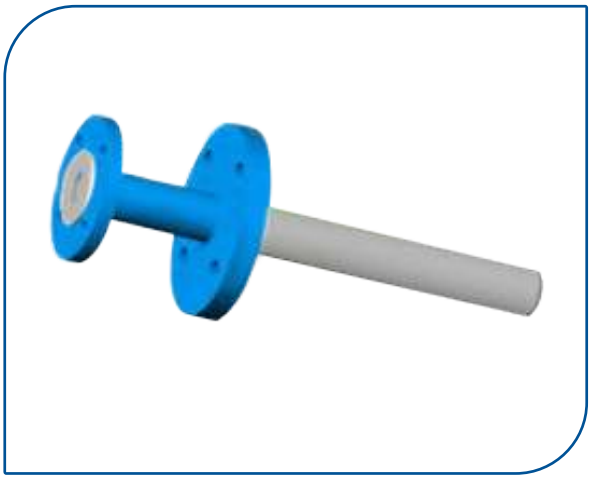

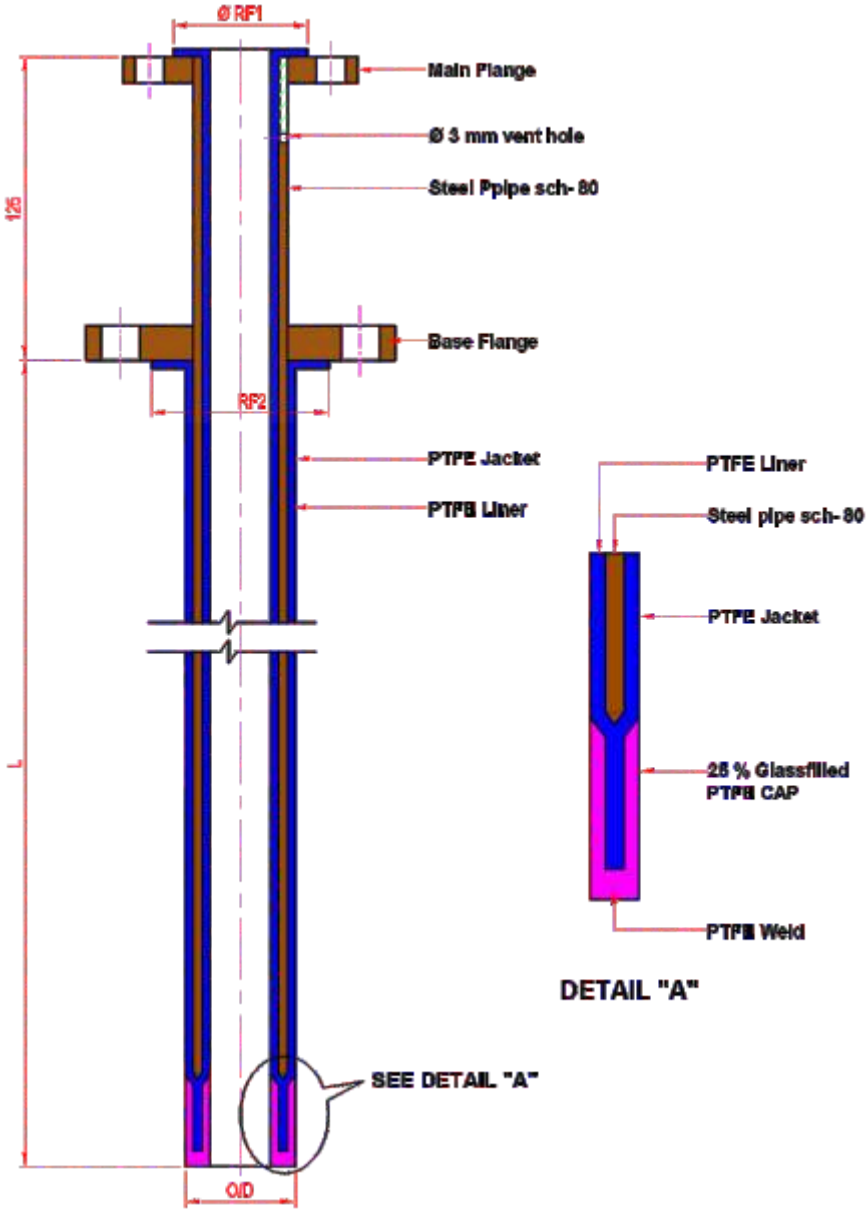

TECHNICAL DATA	
TESTING & INSPECTION	SPARK TESTED FOR 10 KV & HYDRO TESTED AT 10 KG/CM2 & PAINTED WITH 2 COATES OF RED OXIDE PRIMER
PRESSURE RATING	VACUUME TO 6 KG/CM2
TEMP. RATING	-29˚C TO 200˚C

SIZE	RF 1	RF 2	PIPE	MAIN FLANGE	BASE FLANGE	L	O/D
1”	48	88	25	25 NB	50 NB	3000	45
1 1/2”	69	105	40	40 NB	65 NB	3000	58
2”	88	118	50	50 NB	80 NB	3000	70
3”	118	151	80	80 NB	100 NB	3000	99

Icon Valves & Engineering Pvt. Ltd.

Reg. Sales Office :

53, Xth Central Mall, 2nd Floor, Mahavir Nagar, Kandivli (West),

Mumbai - 400 067, Maharashtra, India.

Tel : +91 22 28624565 / 28027070 | Fax : +91 22 28027070

Email.: ptfe@ivevalves.com / valves@ivevalves.com / snmvalves@gmail.com

www.ptfelinedproducts.com